LOT 40
IN OR 1780/1616
HIGHLAND DUNES PB 7/311

HOLDING GREGORY & LORI
1616 HIGHLAND DUNES WAY
FERNANDINA BEACH, FL 32034

2024

00-00-31-1375-0040-0000

BUILDING CHARACTERISTICS

ELEMENT	CD	CONSTRUCTION
Exterior Wall	10	ABOVE AVG 100
Roof Structur	08	IRREGULAR 100
Roof Cover	03	COMP SHNGL 100
Interior Wall	05	DRYWALL 100
Interior Floo	12	HARDWOOD 70
Interior Floo	14	CARPET 30
Air Condition	03	CENTRAL 100
Heating Type	04	AIR DUCTED 100
Bedrooms		4 100
Bathrooms		3 100
Frame	02	WOOD FRAME 100
Stories	1.	1. 100
Units		0 100
Occupancy	00	NONE 100
Quality	04	Quality Level 04
DOR CODE	0100	SINGLE FAMILY
MAP NUM		MKT AREA 01
NEIGHBORHOOD/LOC	1104.00	

AREA TYPE	TOTAL GROSS AREA	PCT OF BASE	TOT ADJ AREA	SUBAREA MARKET VALUE
BAS	2,220	100	2,220	366,377
FGR	588	55	323	53,307
FOP	80	30	24	3,960
FOP	163	30	49	8,086
PTO	48	5	2	330
UAT	240	10	24	3,960
TOTALS	3,339		2,642	436,022

MARKET ADJUSTMENTS

TYPE	MDL	EFF. AREA	TOT ADJ PTS	EFF. BASE RATE	REPL. COST NEW	AYB	EYB	ECON	FNCT		NORM	% COND
0500	01	2,642	116.4240	174.64	461,399	2011	2011	0	0	0	5.50	94.50

1 SFR CUST – 100% - 2013 Heated Area: 2220 HX Base Yr 2013

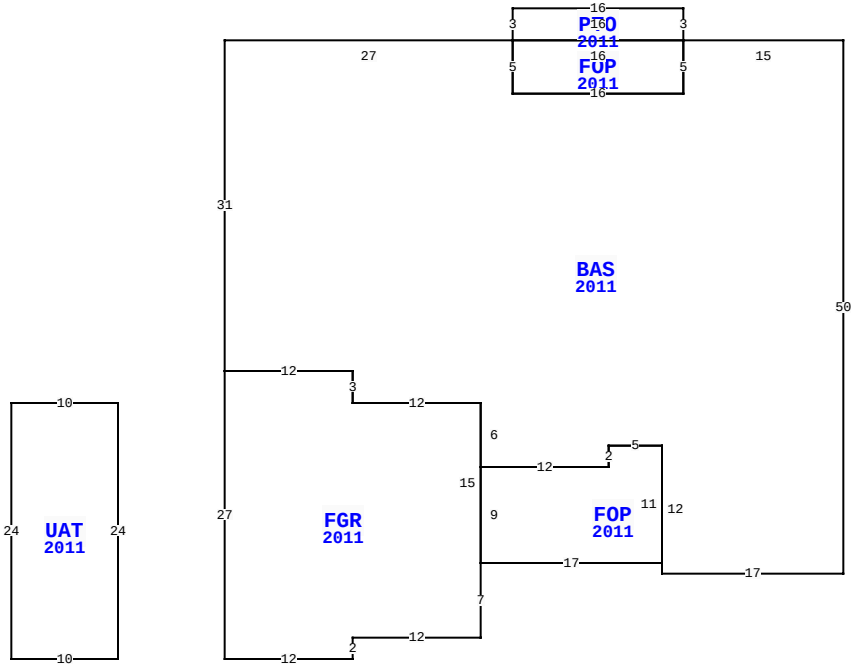

1616 HIGHLAND DUNES WAY, FERNANDINA BEACH

BLD DATE		LGL DATE	
XF DATE		LAND DATE	
INC DATE		AG DATE	

NASSAU COUNTY PROPERTY

PAGE 1 of 1 2

VALUATION SUMMARY

VALUATION BY		STANDARD
Tax Group: 2	Tax Dist:	
BUILDING MARKET VALUE		436,022
TOTAL MARKET OB/XF VALUE		39,334
TOTAL LAND VALUE - MARKET		200,000
TOTAL MARKET VALUE		675,356
SOH/AGL Deduction		361,205
ASSESSED VALUE		314,151
TOTAL EXEMPTION VALUE	HX HB	50,000
BASE TAXABLE VALUE		264,151
TOTAL JUST VALUE		675,356
NCON VALUE		0
INCOME VALUE		
PREVIOUS YEAR MKT VALUE		658,478

PERMIT NUM	DESCRIPTION	AMT	ISSUED
20110868	NEW CONSTR	170,000	05/17/2011

SALES DATA

OFF RECORD Number	DATE	TYPE INST	Q U	V I	RSN CD	SALE PRICE
1780/1616	2/23/2012	WD	Q	I	01	360,000
GRANTOR: HIGHLAND 35 LLC						
GRANTEE: HOLDING GREGORY & L						
1738/1688	5/17/2011	WD	U	V	11	42,000
GRANTOR: REDUS FLORIDA LAND LL						
GRANTEE: HIGHLAND 35 LLC						

BUILDING NOTES

BUILDING DIMENSIONS

BAS=[YR=2011] W15 PTO=[YR=2011] N3W16S3 FOP=[YR=2011] S5E16N5W16$ E16$ S5W16 N5 W27 S31 FGR=[YR=2011] S27E12N2E12 N7 FOP=[YR=2011] E17N11W5S2W12S9$ N15W12N3W12$ E12S3E12S6 E12N2 E5 S12 E17 N50$ PTR=W68S34 UAT=[YR=2011] W10 S24E10N24$ N34E68$.

EXTRA FEATURES

LN	OB/XF CODE	DESCRIPTION	BLD	CAP	L	W	UNITS	UT	Adj R	ADJ UNIT PRICE	ORIG COND	YEAR ON	YEAR ACTUAL	Q	% COND	OB/XF MKT VALUE	NOTES
1	0920	CWALL-WD/M	0	100	0	0	130.00	LF	390.00	390.00	100	2011	2011	3	50	25,350	
2	0855	CONC PAVER	0	100	38	24	912.00	SF	10.00	10.00	100	2011	2011	3	92	8,390	
3	0855	CONC PAVER	0	100	21	4	84.00	SF	10.00	10.00	100	2011	2011	3	92	773	
4	0476	VF 6 SBPL	0	100	0	0	164.00	LF	32.00	32.00	100	2012	2012	3	83	4,356	
5	0476	VF 6 SBPL	0	100	0	0	35.00	LF	16.00	16.00	100	2012	2012	3	83	465	

LAND DESCRIPTION

TOTAL OB/XF 39,334

LN	USE CODE	CLS	LAND USE DESCRIPTION	CAP	RD	LOC ZONE	FRONT	DEPTH	TOT LND UTS	UNIT TYPE	DT	DPTH FACT	% COND	TOT ADJ	UNIT PRICE	ADJ UNIT PRICE	LAND VALUE	OTHER ADJUSTMENTS AND NOTES	YEAR	DENSITY	DECL	FRZ	YR	CONSRV
1	000100	C	SFR	100	0003	R-1	0.00	0.00	1.00	LT		1.00	1.00	1.00	200,000.00	200,000.00	200,000							

REVIEW DATE 05/12/2019 BY KBA Total Acres: 0.00 Total Land Value: 200,000 Market: 0 Agricultural: 0 Common: 200,000 PRINTED 08/06/2024 BY SYS