LOT 34
PT OR 2224/1843
HIGHLAND DUNES PB 7/311

VAN LENNEP HECTOR T & LORI F L/E/
1625 HIGHLAND DUNES WAY
FERNANDINA BEACH, FL 32034-2458

2024

00-00-31-1375-0034-0000

BUILDING CHARACTERISTICS

ELEMENT	CD	CONSTRUCTION
Exterior Wall	10	ABOVE AVG 100
Roof Structur	08	IRREGULAR 100
Roof Cover	03	COMP SHNGL 100
Interior Wall	05	DRYWALL 100
Interior Floo	12	HARDWOOD 90
Interior Floo	15	HARDTILE 10
Air Condition	03	CENTRAL 100
Heating Type	04	AIR DUCTED 100
Bedrooms		5 100
Bathrooms		3 100
Frame	02	WOOD FRAME 100
Stories	1.	1. 100
Units		0 100
Occupancy	00	NONE 100
Quality	04	Quality Level 04
DOR CODE	0100	SINGLE FAMILY
MAP NUM		MKT AREA 01
NEIGHBORHOOD/LOC	1104.00	

AREA TYPE	TOTAL GROSS AREA	PCT OF BASE	TOT ADJ AREA	SUBAREA MARKET VALUE
BAS	2,607	100	2,607	426,008
FGR	462	55	254	41,506
FOP	134	30	40	6,537
FOP	281	30	84	13,726
TOTALS	3,484		2,985	487,777

MARKET ADJUSTMENTS

TYPE	MDL	EFF. AREA	TOT ADJ PTS	EFF. BASE RATE	REPL. COST NEW	AYB	EYB	ECON	FNCT		NORM	% COND
0500	01	2,985	115.2816	172.92	516,166	2011	2011	0	0	0	5.50	94.50

1 SFR CUST – 100% - 2012 Heated Area: 2607 HX Base Yr 2012

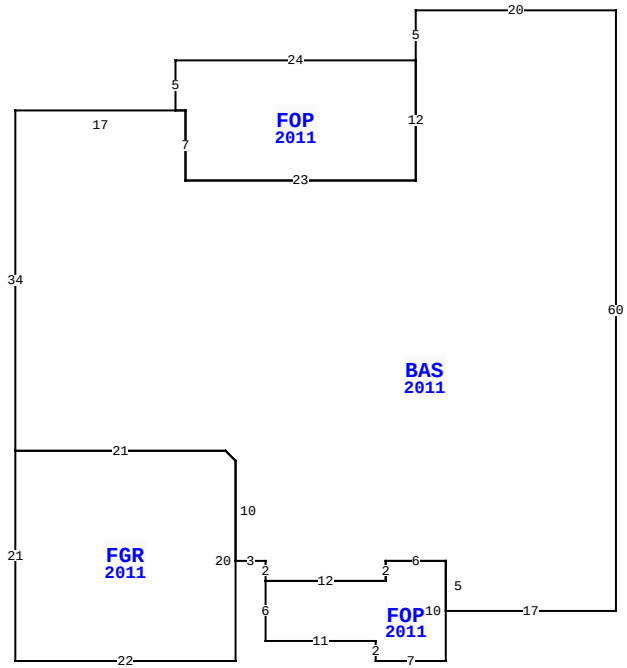

1625 HIGHLAND DUNES WAY, FERNANDINA BEACH

BLD DATE		LGL DATE	
XF DATE		LAND DATE	
INC DATE		AG DATE	

NASSAU COUNTY PROPERTY

PAGE 1 of 1 2

VALUATION SUMMARY

VALUATION BY		STANDARD
Tax Group: 2	Tax Dist:	
BUILDING MARKET VALUE		487,777
TOTAL MARKET OB/XF VALUE		85,303
TOTAL LAND VALUE - MARKET		200,000
TOTAL MARKET VALUE		773,080
SOH/AGL Deduction		414,413
ASSESSED VALUE		358,667
TOTAL EXEMPTION VALUE	HX HB	50,000
BASE TAXABLE VALUE		308,667
TOTAL JUST VALUE		773,080
NCON VALUE		0
INCOME VALUE		
PREVIOUS YEAR MKT VALUE		756,352

PERMIT NUM	DESCRIPTION	AMT	ISSUED
20151259	134LFFNC	0	06/19/2015
20150998	SCRNRM	2,500	05/07/2015
20142285	SWIM POOL	20,000	10/24/2014
20101947	NEW CONSTR	259,038	11/10/2010

SALES DATA

OFF RECORD Number	DATE	TYPE INST	Q U	V I	RSN CD	SALE PRICE
2224/1843	9/12/2018	QC	U	I	11	100
GRANTOR: VAN LENNEP HECTOR T &						
GRANTEE: VAN LENNEP FAMILY T						
1826/1997	11/16/2012	QC	U	I	11	120,100
GRANTOR: VANLENNEP HECTOR THOM						
GRANTEE: VANLENNEP HECTOR TH						

BUILDING NOTES

BUILDING DIMENSIONS

BAS=[YR=2011] W20S5 FOP=[YR=2011] W24S5E1 S7E23N12$ S12W23N7W17 S34 FGR=[YR=2011] S21E22N20 L1 U1 W21$ E21 R1 D1 S10E3S2 FOP=[YR=2011] S6 E11S2E7N10W6S2W12$ E12N2E6S5 E17 N60$.

EXTRA FEATURES

LN	OB/XF CODE	DESCRIPTION	BLD	CAP	L	W	UNITS	UT	Adj R	ADJ UNIT PRICE	ORIG COND	YEAR ON	YEAR ACTUAL	Q	% COND	OB/XF MKT VALUE	NOTES
1	0920	CWALL-WD/M	0	100	0	0	190.00	LF	390.00	390.00	100	2011	2011	3	50	37,050	
2	0855	CONC PAVER	0	100	38	22	836.00	SF	10.00	10.00	100	2011	2011	3	92	7,691	
3	0855	CONC PAVER	0	100	24	4	96.00	SF	10.00	10.00	100	2011	2011	3	92	883	
4	0911	SCRN RM A	0	100	0	0	730.00	SF	17.50	17.50	100	2015	2015	3	70	8,943	
5	0855	CONC PAVER	0	100	0	0	430.00	SF	10.00	10.00	100	2015	2015	3	95	4,085	
6	0861	POOL GUNIT	0	100	0	0	300.00	SF	85.00	85.00	100	2015	2015	3	78	19,890	
7	0855	CONC PAVER	0	100	0	0	310.00	SF	10.00	10.00	100	2015	2015	3	95	2,945	
8	0476	VF 6 SBPL	0	100	0	0	134.00	LF	32.00	32.00	100	2015	2015	3	89	3,816	

LAND DESCRIPTION

TOTAL OB/XF 85,303

LN	USE CODE	CLS	LAND USE DESCRIPTION	CAP	RD	LOC ZONE	FRONT	DEPTH	TOT LND UTS	UNIT TYPE	DT	DPTH FACT	% COND	TOT ADJ	UNIT PRICE	ADJ UNIT PRICE	LAND VALUE	OTHER ADJUSTMENTS AND NOTES	YEAR	DENSITY	DECL	FRZ	YR	CONSRV
1	000100	C	SFR	100	0003	R-1	0.00	0.00	1.00	LT		1.00	1.00	1.00	200,000.00	200,000.00	200,000							

REVIEW DATE 07/10/2020 BY DJA Total Acres: 0.00 Total Land Value: 200,000 Market: 0 Agricultural: 0 Common: 200,000 PRINTED 08/06/2024 BY SYS