PT LOT 63 SEC ONE
HAMBYS SUB PB 2/32 &
PT LOT 1

SWEAT SHERISE LIVING TRUST/SWEAT SHERISE TRUSTEE
4600 WILLACOOCHEE HWY
DOUGLAS, GA 31535

2024

00-00-31-1360-0063-0000

BUILDING CHARACTERISTICS

ELEMENT	CD	CONSTRUCTION
Exterior Wall	10	ABOVE AVG 100
Roof Structur	03	GABLE/HIP 100
Roof Cover	11	SLATE 100
Interior Wall	05	DRYWALL 50
Interior Wall	06	CUST PANEL 50
Interior Floo	09	PINE WOOD 60
Interior Floo	14	CARPET 40
Air Condition	03	CENTRAL 100
Heating Type	04	AIR DUCTED 100
Bedrooms		6 100
Bathrooms		4.5 100
Frame	02	WOOD FRAME 100
Stories	2.5	2.5 100
Units		0 100
BUD8 Adjustme	02	DIST FB 100
Quality	06	Quality Level 06
DOR CODE	0100	SINGLE FAMILY
MAP NUM		MKT AREA 01
NEIGHBORHOOD/LOC	1052.00	

AREA TYPE	TOTAL GROSS AREA	PCT OF BASE	TOT ADJ AREA	SUBAREA MARKET VALUE
BAL	54	15	8	2,556
BAL	324	15	49	15,652
BAS	266	100	266	84,971
BAS	822	100	822	262,578
DCK	342	10	34	10,861
FOP	8	30	2	639
FOP	12	30	4	1,278
FOP	72	30	22	7,028
FOP	152	30	46	14,695
FUS	936	100	936	298,994
TOTALS	5,290		3,977	1,270,403

MARKET ADJUSTMENTS

TYPE	MDL	EFF. AREA	TOT ADJ PTS	EFF. BASE RATE	REPL. COST NEW	AYB	EYB	ECON	FNCT		NORM	% COND
0500	12	3,977	224.1675	336.25	1,337,266	1952	2012	0	0	0	5.00	95.00

1 SFR CUST – 0% - 0 Heated Area: 3480 HX Base Yr

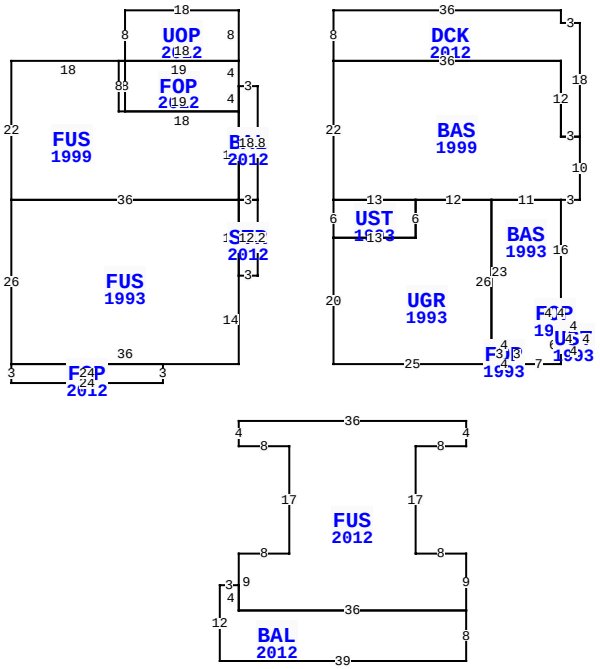

** This building has 17 Sub-Areas

BLD DATE		LGL DATE	
XF DATE		LAND DATE	05/07/2024 MLU
INC DATE		AG DATE	

2334 S FLETCHER AVE, FERNANDINA BEACH

EXTRA FEATURES

LN	OB/XF CODE	DESCRIPTION	BLD	CAP	L	W	UNITS	UT	Adj R	ADJ UNIT PRICE	ORIG COND	YEAR ON	YEAR ACTUAL	Q	% COND	OB/XF MKT VALUE	NOTES
1	0416	DUNEWALKS	0	0	0	0	1,040.00	SF	30.00	30.00	100	2012	2012	3	55	17,160	
2	0463	FENCE GATE	0	0	0	0	2.00	UT	300.00	300.00	100	2012	2012	3	83	498	
3	0855	CONC PAVER	0	0	0	0	2,188.00	SF	7.00	7.00	100	1999	1999	3	77	11,793	
4	0855	CONC PAVER	0	0	0	0	716.00	SF	10.00	10.00	100	2012	2012	3	93	6,659	

NASSAU COUNTY PROPERTY

PAGE 1 of 1 2

VALUATION SUMMARY

VALUATION BY	STANDARD
Tax Group: 2	Tax Dist:
BUILDING MARKET VALUE	1,270,403
TOTAL MARKET OB/XF VALUE	36,110
TOTAL LAND VALUE - MARKET	990,000
TOTAL MARKET VALUE	2,296,513
SOH/AGL Deduction	0
ASSESSED VALUE	2,296,513
TOTAL EXEMPTION VALUE	0
BASE TAXABLE VALUE	2,296,513
TOTAL JUST VALUE	2,296,513
NCON VALUE	0
INCOME VALUE	
PREVIOUS YEAR MKT VALUE	2,151,304

PERMIT NUM	DESCRIPTION	AMT	ISSUED
20120595	NEW CONSTR	850	04/10/2012
20120336	ROOF OVER FOP	8,000	03/01/2012
02120216	NEW CONSTR	900	02/09/2012
20120154	GAS	3,000	01/30/2012
20120033	FIXTURES	500	01/10/2012
20112179	DUNEWALK	45,000	12/07/2011

SALES DATA

OFF RECORD Number	DATE	TYPE INST	Q U	V I	RSN CD	SALE PRICE
2665/1835	4/27/2023	WD	U	I	11	100
GRANTOR: SWEAT MONICA						
GRANTEE: SWEAT SHERISE LIVIN						
2511/0139	11/02/2021	WD	Q	I	01	2,900,000
GRANTOR: CANTRELL WILLIAM R &						
GRANTEE: SWEAT MONICA						

BUILDING NOTES

BUILDING DIMENSIONS

UOP=[YR=2012] W18 S8 FUS=[YR=1999] W18 S22 FUS=[YR=1993] S26 FOP=[YR=2012] S3 E24 N3 W24 $ E36 N14 STR=[YR=2012] E3 N12 BAL=[YR=2012] N18 W3 FOP=[YR=2012] N4 W19 S8 E19 N4$ S18 E3$ W3 S12$ N12 W36$ E36 N14 W18 N8 $ E18 N8 $ PTR= E15 DCK=[YR=2012] E36 S2 E3 S18 BAS=[YR=1999] S10 W3 BAS=[YR=1993] S16 FOP=[YR=1993] W2 S4E2 N4 $ W2 S4 E2 UST=[YR=1993] E4 S4 W4 N4 $ S6 W7 FOP=[YR=1993] N3 W4 S3 E4 $ N3 W4 N23 E11 $ W11 UGR=[YR=1993] S26 W25 N20 E13 N6 E12 $ W12 UST=[YR=1993] W13 S6 E13 N6 $ W13 N22 E36 S12 E3 $ W3 N12 W36 N8$ W15 $ PTR=S65 FUS=[YR=2012] E36 S4 W8 S17 E8 S9 BAL=[YR=2012] S8 W39 N12 E3 S4 E36$ W36 N9 E8 N17 W8 N4$ N65$.

LAND DESCRIPTION

TOTAL OB/XF 36,110

LN	USE CODE	CLS	LAND USE DESCRIPTION	CAP	RD	LOC ZONE	FRONT	DEPTH	TOT LND UTS	UNIT TYPE	DT	DPTH FACT	% COND	TOT ADJ	UNIT PRICE	ADJ UNIT PRICE	LAND VALUE	OTHER ADJUSTMENTS AND NOTES	YEAR	DENSITY	DECL	FRZ	YR	CONSRV
1	000120	C	SFR OCN FT	0		R-2	50.00	250.00	50.00	FF		1.00	1.00	1.20	16,500.00	19,800.00	990,000							

REVIEW DATE 05/12/2019 BY KBA Total Acres: 0.00 Total Land Value: 990,000 Market: 0 Agricultural: 0 Common: 990,000 PRINTED 08/06/2024 BY SYS