LOT 15
HAMBYS SUB PB 2/32

O'DONNELL MICHAEL & SUSAN BUCHANAN
2100 S FLETCHER AVE
FERNANDINA BEACH, FL 32034

2024

00-00-31-1360-0015-0000

NASSAU COUNTY PROPERTY

BUILDING CHARACTERISTICS

ELEMENT	CD	CONSTRUCTION
Exterior Wall	19	COMMON BRK 60
Exterior Wall	16	WD FR STUC 40
Roof Structur	03	GABLE/HIP 100
Roof Cover	03	COMP SHNGL 100
Interior Wall	05	DRYWALL 90
Interior Wall	08	DECORATIVE 10
Interior Floo	12	HARDWOOD 50
Interior Floo	14	CARPET 50
Air Condition	03	CENTRAL 100
Heating Type	04	AIR DUCTED 100
Bedrooms		4 100
Bathrooms		2 100
Frame	02	WOOD FRAME 100
Stories	2.	2. 100
Units		0 100
BUD8 Adjustme	02	DIST FB 100
Occupancy	00	NONE 100
Quality	04	Quality Level 04
DOR CODE	0100	SINGLE FAMILY
MAP NUM		MKT AREA 01
NEIGHBORHOOD/LOC	1052.00	

AREA TYPE	TOTAL GROSS AREA	PCT OF BASE	TOT ADJ AREA	SUBAREA MARKET VALUE
BAL	202	15	30	4,356
BAS	1,259	100	1,259	182,830
FGR	375	55	206	29,915
FOP	60	30	18	2,614
FOP	112	30	34	4,938
FOP	130	30	39	5,664
FOP	60	30	18	2,614
FUS	971	100	971	141,007
FUS	311	100	311	45,163
STR	64	10	6	871
TOTALS	3,544		2,892	419,972

MARKET ADJUSTMENTS

TYPE	MDL	EFF. AREA	TOT ADJ PTS	EFF. BASE RATE	REPL. COST NEW	AYB	EYB	ECON	FNCT		NORM	% COND
0500	01	2,892	115.8738	173.81	502,659	1949	2000	0	0	0	16.45	83.55

1 SFR CUST – 0% - 2024 Heated Area: 2541 HX Base Yr

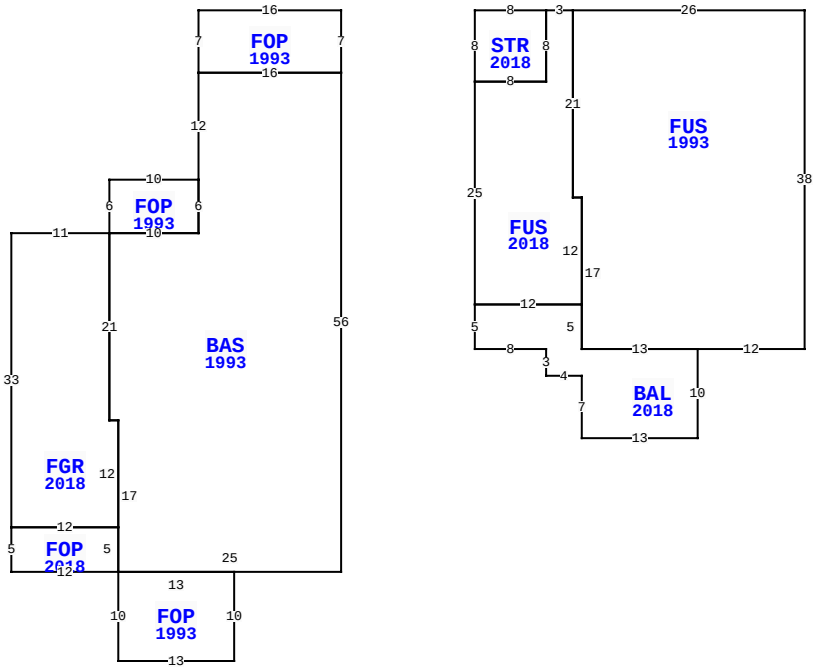

BLD DATE		LGL DATE	
XF DATE		LAND DATE	05/07/2024 MLU
INC DATE		AG DATE	

2100 S FLETCHER AVE, FERNANDINA BEACH

VALUATION SUMMARY

VALUATION BY	STANDARD
Tax Group: 2	Tax Dist:
BUILDING MARKET VALUE	555,980
TOTAL MARKET OB/XF VALUE	17,455
TOTAL LAND VALUE - MARKET	990,000
TOTAL MARKET VALUE	1,563,435
SOH/AGL Deduction	0
ASSESSED VALUE	1,563,435
TOTAL EXEMPTION VALUE	0
BASE TAXABLE VALUE	1,563,435
TOTAL JUST VALUE	1,563,435
NCON VALUE	0
INCOME VALUE	
PREVIOUS YEAR MKT VALUE	1,058,883

PERMIT NUM	DESCRIPTION	AMT	ISSUED
20200171	REMODEL	99,000	04/21/2020
20200009	DEMOLITION	0	03/26/2020
20181741	REMODEL	55,000	05/22/2018
20131740	ROOF	7,000	07/24/2013
20053097	ELEC OTHER	2,000	11/30/2005
20042139	REPAIR/RRF	1,000	11/12/2004

SALES DATA

OFF RECORD Number	DATE	TYPE INST	Q U	V I	RSN CD	SALE PRICE
2667/141	9/14/2023	WD	Q	I	01	1,840,000
GRANTOR: HIGHBEAM INC						
GRANTEE: O'DONNELL MICHAEL &						
2061/0316	7/22/2016	WD	Q	I	01	725,000
GRANTOR: BURNS LEGACY TRUST						
GRANTEE: HIGHBEAM INC						

BUILDING NOTES

BUILDING DIMENSIONS

FOP=[YR=1993] W16 S7 BAS=[YR=1993] S12 FOP=[YR=1993] W10 S6 FGR=[YR=2018] W11 S33 FOP=[YR=2018] S5 E12 N5 W12$ E12 N12 W1 N21$ E10 N6$ S6 W10 S21 E1 S17 FOP=[YR=1993] S10 E13 N10 W13 $ E25 N56 W16 $ E16 N7$ PTR= E15 STR=[YR=2018] E8 FUS=[YR=2018] E3 FUS=[YR=1993] E26 S38 W12 BAL=[YR=2018] S10 W13 N7 W4 N3 W8 N5 E12 S5 E13$ W13N17 W1 N21$ S21 E1 S12 W12 N25 E8 N8$ S8 W8 N8$ W15 $.

EXTRA FEATURES

LN	OB/XF CODE	DESCRIPTION	BLD	CAP	L	W	UNITS	UT	Adj R	ADJ UNIT PRICE	ORIG COND	YEAR ON	YEAR ACTUAL	Q	% COND	OB/XF MKT VALUE	NOTES
1	0810	CONCRETE A	0	0	0	0	256.00	SF	6.50	6.50	100	1965	1965	3	20	333	
2	0855	CONC PAVER	0	0	0	0	877.00	SF	7.00	7.00	100	2018	2018	3	97	5,955	
3	0500	FP-PRE FAB	0	0	0	0	1.00	UT	3,500.00	3,500.00	100	1949	1949	3	20	700	
4	0861	POOL GUNIT	0	0	30	14	420.00	SF	85.00	85.00	100	1972	1972	3	20	7,140	
5	0845	KOOL DECK	0	0	0	0	644.00	SF	7.25	7.25	100	1972	1972	3	23	1,074	
6	0415	BEACHWALK	0	0	0	0	704.00	SF	5.75	5.75	100	1998	1998	3	20	810	
7	0820	WOOD WALK	0	0	0	0	258.00	SF	11.75	11.75	100	1987	1987	3	40	1,213	
8	1242	WD DECK A	0	0	16	9	144.00	SF	8.00	8.00	100	1991	1991	3	20	230	

LAND DESCRIPTION

TOTAL OB/XF 17,455

LN	USE CODE	CLS	LAND USE DESCRIPTION	CAP	RD	LOC ZONE	FRONT	DEPTH	TOT LND UTS	UNIT TYPE	DT	DPTH FACT	% COND	TOT ADJ	UNIT PRICE	ADJ UNIT PRICE	LAND VALUE	OTHER ADJUSTMENTS AND NOTES	YEAR	DENSITY	DECL	FRZ	YR	CONSRV
1	000120	C	SFR OCN FT	0		R-2	50.00	250.00	50.00	FF		1.00	1.00	1.20	16,500.00	19,800.00	990,000							

REVIEW DATE 04/28/2021 BY RK Total Acres: 0.00 Total Land Value: 990,000 Market: 0 Agricultural: 0 Common: 990,000 PRINTED 08/06/2024 BY SYS

LOT 15
HAMBYS SUB PB 2/32

O'DONNELL MICHAEL & SUSAN BUCHANAN
2100 S FLETCHER AVE
FERNANDINA BEACH, FL 32034

2024

00-00-31-1360-0015-0000

NASSAU COUNTY PROPERTY

BUILDING CHARACTERISTICS

ELEMENT	CD	CONSTRUCTION
Exterior Wall	31	HARDIE BRD 100
Roof Structur	01	FLAT 100
Roof Cover	04	BUILT-UP 100
Interior Wall	05	DRYWALL 100
Interior Floo	13	LVT/LAMNT 100
Air Condition	03	CENTRAL 100
Heating Type	04	AIR DUCTED 100
Bedrooms		2 100
Bathrooms		2 100
Frame	02	WOOD FRAME 100
Stories	1.	1. 100
Units		0 100
BUD8 Adjustme	02	DIST FB 100
Occupancy	00	NONE 100
Quality	04	Quality Level 04

DOR CODE 0100 SINGLE FAMILY
MAP NUM | MKT AREA 01
NEIGHBORHOOD/LOC 1052.00

AREA TYPE	TOTAL GROSS AREA	PCT OF BASE	TOT ADJ AREA	SUBAREA MARKET VALUE
BAS	756	100	756	110,324
FOP	147	30	44	6,421
UGR	294	45	132	19,263
TOTALS	1,197		932	136,008

MARKET ADJUSTMENTS

TYPE	MDL	EFF. AREA	TOT ADJ PTS	EFF. BASE RATE	REPL. COST NEW	AYB	EYB	ECON	FNCT		NORM	% COND
0900	01	932	131.5440	164.43	153,249	1973	2000	0	0	0	11.25	88.75

2 SNGL FAM – 0% - 2024 Heated Area: 756 HX Base Yr

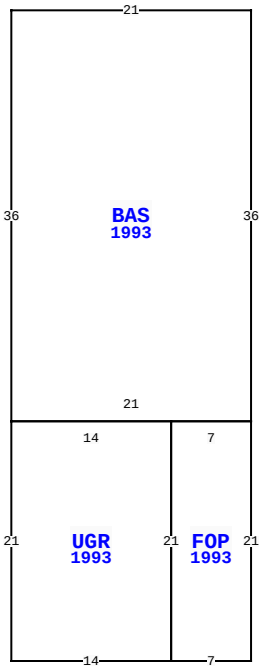

2100 S FLETCHER AVE, FERNANDINA BEACH

BLD DATE		LGL DATE	
XF DATE		LAND DATE	05/07/2024 MLU
INC DATE		AG DATE	

VALUATION SUMMARY

VALUATION BY	STANDARD
Tax Group: 2	Tax Dist:
BUILDING MARKET VALUE	555,980
TOTAL MARKET OB/XF VALUE	17,455
TOTAL LAND VALUE - MARKET	990,000
TOTAL MARKET VALUE	1,563,435
SOH/AGL Deduction	0
ASSESSED VALUE	1,563,435
TOTAL EXEMPTION VALUE	0
BASE TAXABLE VALUE	1,563,435
TOTAL JUST VALUE	1,563,435
NCON VALUE	0
INCOME VALUE	
PREVIOUS YEAR MKT VALUE	1,058,883

PERMIT NUM	DESCRIPTION	AMT	ISSUED
B041292	REPAIR/RRF	2,000	07/15/2004
B020136	H/AC	3,000	01/29/2002
B983050	XFOB	1,500	01/23/1998
7063	REPAIR/RRF	1,500	05/15/1992
5839B	REPAIR/RRF	2,300	03/06/1990

SALES DATA

OFF RECORD Number	DATE	TYPE INST	Q U	V I	RSN CD	SALE PRICE
2667/141	9/14/2023	WD	Q	I	01	1,840,000
GRANTOR: HIGHBEAM INC						
GRANTEE: O'DONNELL MICHAEL &						
2061/0316	7/22/2016	WD	Q	I	01	725,000
GRANTOR: BURNS LEGACY TRUST						
GRANTEE: HIGHBEAM INC						

BUILDING NOTES

BUILDING DIMENSIONS

BAS=[YR=1993] W21 S36 UGR=[YR=1993] S21 E14 FOP=[YR=1993] E7 N21 W7S21$ N21 W14$ E21 N36$.

EXTRA FEATURES

LN	OB/XF CODE	DESCRIPTION	BLD	CAP	L	W	UNITS	UT	Adj R	ADJ UNIT PRICE	ORIG COND	YEAR ON	YEAR ACTUAL	Q	% COND	OB/XF MKT VALUE	NOTES

LAND DESCRIPTION

TOTAL OB/XF 0

LN	USE CODE	CLS	LAND USE DESCRIPTION	CAP	RD	LOC ZONE	FRONT	DEPTH	TOT LND UTS	UNIT TYPE	DT	DPTH FACT	% COND	TOT ADJ	UNIT PRICE	ADJ UNIT PRICE	LAND VALUE	OTHER ADJUSTMENTS AND NOTES	YEAR	DENSITY	DECL	FRZ	YR	CONSRV

REVIEW DATE 04/28/2021 BY RK Total Acres: 0.00 Total Land Value: 990,000 Market: 0 Agricultural: 0 Common: 990,000 PRINTED 08/06/2024 BY SYS