LOT 255
IN OR 2104/48
GA FDNA BEACH #2 UNR

LANDERS KIMBERLY & LESTER/SCOTT ANNA
636 TARPON AVE
FERNANDINA BEACH, FL 32034

2024

00-00-31-134B-0255-0000

BUILDING CHARACTERISTICS

ELEMENT	CD	CONSTRUCTION
Exterior Wall	10	ABOVE AVG 100
Roof Structur	03	GABLE/HIP 100
Roof Cover	03	COMP SHNGL 100
Interior Wall	05	DRYWALL 100
Interior Floo	12	HARDWOOD 70
Interior Floo	11	CLAY TILE 30
Air Condition	03	CENTRAL 100
Heating Type	04	AIR DUCTED 100
Bedrooms		4 100
Bathrooms		3 100
Frame	02	WOOD FRAME 100
Stories	2.	2. 100
Units		0 100
Occupancy	00	NONE 100
Quality	05	Quality Level 05
DOR CODE	0100	SINGLE FAMILY
MAP NUM		MKT AREA 01
NEIGHBORHOOD/LOC	1041.0100	

AREA TYPE	TOTAL GROSS AREA	PCT OF BASE	TOT ADJ AREA	SUBAREA MARKET VALUE
BAL	16	15	2	301
BAS	540	100	540	81,173
FGR	1,058	55	582	87,487
FOP	20	30	6	902
FOP	20	30	6	902
FOP	272	30	82	12,327
FUS	1,598	100	1,598	240,213
PTO	96	5	5	752
STR	48	10	5	752
TOTALS	3,668		2,826	424,807

MARKET ADJUSTMENTS

TYPE	MDL	EFF. AREA	TOT ADJ PTS	EFF. BASE RATE	REPL. COST NEW	AYB	EYB	ECON	FNCT		NORM	% COND
0900	01	2,826	123.9744	154.97	437,945	2016	2016	0	0	0	3.00	97.00

1 SNGL FAM – 100% - 2019 Heated Area: 2138 HX Base Yr 2019

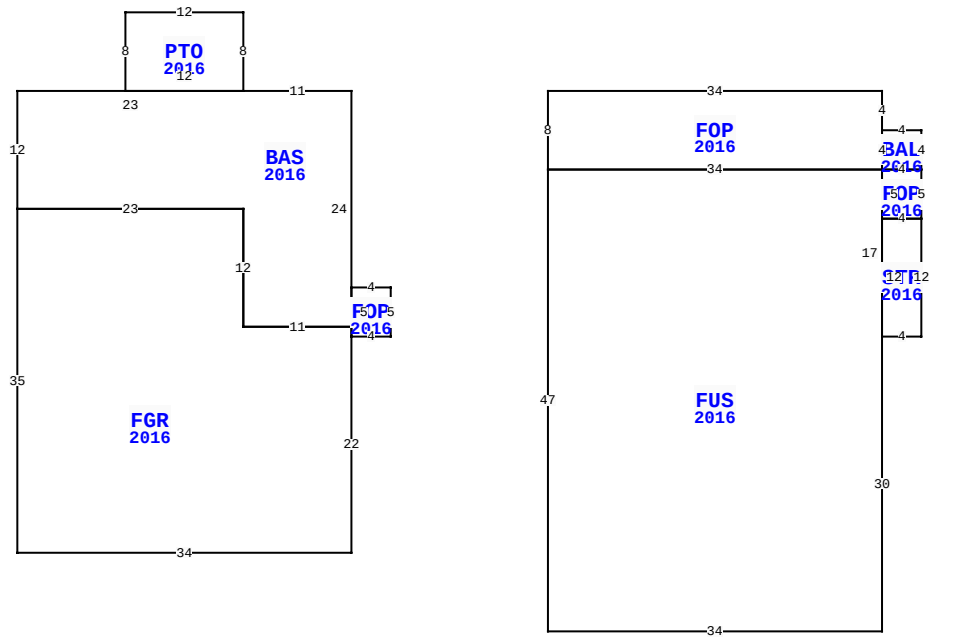

636 TARPON AVE, FERNANDINA BEACH

BLD DATE		LGL DATE	
XF DATE		LAND DATE	03/20/2024 MLU
INC DATE		AG DATE	

NASSAU COUNTY PROPERTY

PAGE 1 of 1 2

VALUATION SUMMARY

VALUATION BY		STANDARD
Tax Group: 2	Tax Dist:	
BUILDING MARKET VALUE		424,807
TOTAL MARKET OB/XF VALUE		8,806
TOTAL LAND VALUE - MARKET		265,000
TOTAL MARKET VALUE		698,613
SOH/AGL Deduction		228,603
ASSESSED VALUE		470,010
TOTAL EXEMPTION VALUE	HX HB	50,000
BASE TAXABLE VALUE		420,010
TOTAL JUST VALUE		698,613
NCON VALUE		0
INCOME VALUE		
PREVIOUS YEAR MKT VALUE		664,541

PERMIT NUM	DESCRIPTION	AMT	ISSUED
20151588	CO ISSUED	0	06/27/2016
20151588	NEW CONSTR	296,331	07/08/2015

SALES DATA

OFF RECORD Number	DATE	TYPE INST	Q U	V I	RSN CD	SALE PRICE
2104/0048	2/24/2017	WD	Q	I	01	420,000
GRANTOR: SUTTON BYROM E						
GRANTEE: LANDERS KIMBERLY &						
0735/1780	8/07/1995	WD	Q	V		25,000
GRANTOR: DIXON ROBERT & AUDREY						
GRANTEE: SUTTON BYROM E						

BUILDING NOTES

BUILDING DIMENSIONS

BAS=[YR=2016] W11 PTO=[YR=2016] N8 W12 S8 E12$ W23 S12 FGR=[YR=2016] S35 E34 N22 FOP=[YR=2016] E4 N5 W4 S5$ N1 W11 N12 W23$ E23 S12 E11 N24$ PTR=E20 FOP=[YR=2016] E34 S4 BAL=[YR=2016] E4 S4 FOP=[YR=2016] S5 STR=[YR=2016] S12 W4 FUS=[YR=2016] S30 W34 N47 E34 S17$ N12 E4$ W4 N5 E4$ W4 N4$ S4 W34 N8$ W20$.

EXTRA FEATURES

LN	OB/XF CODE	DESCRIPTION	BLD	CAP	L	W	UNITS	UT	Adj R	ADJ UNIT PRICE	ORIG COND	YEAR ON	YEAR ACTUAL	Q	% COND	OB/XF MKT VALUE	NOTES
1	0811	CONCRETE B	0	100	0	0	1,639.00	SF	5.20	5.20	100	2016	2016	3	96	8,182	
2	0810	CONCRETE A	0	100	0	0	100.00	SF	6.50	6.50	100	2016	2016	3	96	624	

LAND DESCRIPTION

TOTAL OB/XF 8,806

LN	USE CODE	CLS	LAND USE DESCRIPTION	CAP	RD	LOC ZONE	FRONT	DEPTH	TOT LND UTS	UNIT TYPE	DT	DPTH FACT	% COND	TOT ADJ	UNIT PRICE	ADJ UNIT PRICE	LAND VALUE	OTHER ADJUSTMENTS AND NOTES	YEAR	DENSITY	DECL	FRZ	YR	CONSRV
1	000100	C	SFR	100		R-2	50.00	100.00	50.00	FF		1.00	1.00	1.00	5,300.00	5,300.00	265,000							

REVIEW DATE 01/14/2021 BY TWA Total Acres: 0.00 Total Land Value: 265,000 Market: 0 Agricultural: 0 Common: 265,000 PRINTED 08/06/2024 BY SYS