LOTS 226 & 227
IN OR 2224/218
IN OR 690 PG 1413

SMSM HOLDINGS LLC
4144 N OLCOTT AVE
NORRIDGE, IL 60706

**2024**

**00-00-31-134B-0226-0000**

## BUILDING CHARACTERISTICS

| ELEMENT | CD | CONSTRUCTION |
|---|---|---|
| Exterior Wall | 10 | ABOVE AVG 100 |
| Roof Structur | 08 | IRREGULAR 100 |
| Roof Cover | 03 | COMP SHNGL 100 |
| Interior Wall | 05 | DRYWALL 100 |
| Interior Floo | 15 | HARDTILE 100 |
| Air Condition | 03 | CENTRAL 100 |
| Heating Type | 04 | AIR DUCTED 100 |
| Bedrooms | | 4 100 |
| Bathrooms | | 4.5 100 |
| Frame | 02 | WOOD FRAME 100 |
| Stories | 3. | 3. 100 |
| Units | | 0 100 |
| Quality | 05 | Quality Level 05 |

DOR CODE 0100 SINGLE FAMILY
MAP NUM | MKT AREA 01
NEIGHBORHOOD/LOC 1041.0100

| AREA TYPE | TOTAL GROSS AREA | PCT OF BASE | TOT ADJ AREA | SUBAREA MARKET VALUE |
|---|---|---|---|---|
| BAL | 48 | 15 | 7 | 1,599 |
| BAL | 96 | 15 | 14 | 3,197 |
| BAL | 96 | 15 | 14 | 3,197 |
| BAL | 103 | 15 | 15 | 3,426 |
| BAL | 292 | 15 | 44 | 10,048 |
| BAS | 654 | 100 | 654 | 149,343 |
| FGR | 528 | 55 | 290 | 66,222 |
| FOP | 18 | 30 | 5 | 1,142 |
| FOP | 48 | 30 | 14 | 3,197 |
| FOP | 96 | 30 | 29 | 6,623 |
| TOTALS | 5,314 | | 3,955 | 903,134 |

## MARKET ADJUSTMENTS

| TYPE | MDL | EFF. AREA | TOT ADJ PTS | EFF. BASE RATE | REPL. COST NEW | AYB | EYB | ECON | FNCT | | NORM | % COND |
|---|---|---|---|---|---|---|---|---|---|---|---|---|
| 0500 | 11 | 3,955 | 153.0000 | 229.50 | 907,672 | 2021 | 2021 | 0 | 0 | 0 | 0.50 | 99.50 |

2 SFR CUST - 0% - 0 Heated Area: 3358 HX Base Yr

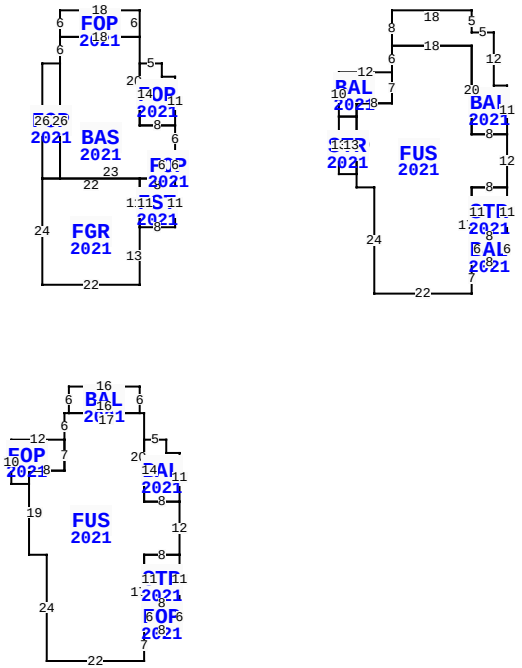


** This building has 19 Sub-Areas

334 TARPON AVE, FERNANDINA BEACH

| | | | |
|---|---|---|---|
| BLD DATE | | LGL DATE | |
| XF DATE | | LAND DATE | 03/20/2024 MLU |
| INC DATE | | AG DATE | |

## NASSAU COUNTY PROPERTY

PAGE 1 of 2 2

### VALUATION SUMMARY

| | |
|---|---|
| VALUATION BY | STANDARD |
| Tax Group: 2 | Tax Dist: |
| BUILDING MARKET VALUE | 1,126,988 |
| TOTAL MARKET OB/XF VALUE | 80,442 |
| TOTAL LAND VALUE - MARKET | 795,000 |
| TOTAL MARKET VALUE | 2,002,430 |
| SOH/AGL Deduction | 337,147 |
| ASSESSED VALUE | 1,665,283 |
| TOTAL EXEMPTION VALUE | 0 |
| BASE TAXABLE VALUE | 1,665,283 |
| TOTAL JUST VALUE | 2,002,430 |
| NCON VALUE | 0 |
| INCOME VALUE | |
| PREVIOUS YEAR MKT VALUE | 1,907,990 |

| PERMIT NUM | DESCRIPTION | AMT | ISSUED |
|---|---|---|---|
| 20210531 | CO ISSUED | 0 | 06/02/2021 |
| 20200177 | SWIM POOL | 70,000 | 04/21/2020 |
| 20190032 | DEMOLITION | 0 | 12/19/2019 |
| 20190531 | NEW CONSTR | 0 | 12/19/2019 |
| 20190533 | ACC UNIT | 0 | 12/19/2019 |
| 20070462 | REROOF W/30YR SHN | 3,528 | 03/15/2007 |

### SALES DATA

| OFF RECORD Number | DATE | TYPE INST | Q / U | V / I | RSN CD | SALE PRICE |
|---|---|---|---|---|---|---|
| 2224/0218 | 8/22/2018 | SW | U | I | 11 | 100 |
| GRANTOR: STRAUGHN SHANNON I | | | | | | |
| GRANTEE: SMSM HOLDINGS LLC | | | | | | |
| 2224/0208 | 8/22/2018 | SW | U | I | 11 | 100 |
| GRANTOR: S MASTERS LIMITED PAR | | | | | | |
| GRANTEE: STRAUGHN SHANNON I | | | | | | |

### BUILDING NOTES

### BUILDING DIMENSIONS

FOP=[YR=2021] W18 S6 BAS=[YR=2021] S6 FOP=[YR=2021] W4 S26
FGR=[YR=2021] S24 E22 N13 FST=[YR=2021] E8 N11 FOP=[YR=2021]
N6 W3 S6 E3$ W8 S11$ N11 W22$ E4 N26$ S26 E23 N6 E3 N6
FOP=[YR=2021] N11 W3 N3 W5 S14 E8$ W8 N20 W18$ E18 N6$
PTR=S85 BAL=[YR=2021] W16 S6 FUS=[YR=2021] W1 S6
FOP=[YR=2021] W12 S10 E4 N3 E8 N7$ S7 W8 S19 E4 S24 E22 N7
FOP=[YR=2021] E8 N6 STR=[YR=2021] N11 W8 S11 E8$ W8 S6$ N17
E8 N12 BAL=[YR=2021] N11 W3 N3 W5 S14 E8$ W8 N20 W17$ E16 N6$
N85$ PTR=E75 BAL=[YR=2021] W18 S8 FUS=[YR=2021] S6
BAL=[YR=2021] W12 S10 STR=[YR=2021] S13 E4 N13 W4$ E4 N3 E8
N7$ S7 W8 S19 E4 S24 E22 N7 BAL=[YR=2021] E8 N6 STR=[YR=2021]
N11 W8 S11 E8$ W8 S6$ N17 E8 N12 W8 N20 W18$ E18 S20 E8 N11

## EXTRA FEATURES

| LN | OB/XF CODE | DESCRIPTION | BLD | CAP | L | W | UNITS | UT | Adj R | ADJ UNIT PRICE | ORIG COND | YEAR ON | YEAR ACTUAL | Q | % COND | OB/XF MKT VALUE | NOTES |
|---|---|---|---|---|---|---|---|---|---|---|---|---|---|---|---|---|---|
| 1 | 0855 | CONC PAVER | 0 | 0 | 0 | 0 | 3,180.00 | SF | 10.00 | 10.00 | 100 | 2021 | 2021 | 3 | 99 | 31,482 | |
| 2 | 0861 | POOL GUNIT | 0 | 0 | 30 | 16 | 480.00 | SF | 85.00 | 85.00 | 100 | 2021 | 2021 | 3 | 95 | 38,760 | |
| 3 | 0409 | ELEVATOR R | 0 | 0 | 0 | 0 | 1.00 | UT | 10,200.00 | 10,200.00 | 100 | 2021 | 2021 | 3 | 100 | 10,200 | |

## LAND DESCRIPTION

TOTAL OB/XF 80,442

| LN | USE CODE | CLS | LAND USE DESCRIPTION | CAP | RD | LOC ZONE | FRONT | DEPTH | TOT LND UTS | UNIT TYPE | DT | DPTH FACT | % COND | TOT ADJ | UNIT PRICE | ADJ UNIT PRICE | LAND VALUE | OTHER ADJUSTMENTS AND NOTES | YEAR | DENSITY | DECL | FRZ | YR | CONSRV |
|---|---|---|---|---|---|---|---|---|---|---|---|---|---|---|---|---|---|---|---|---|---|---|---|---|
| 1 | 000100 | C | SFR | 0 | 0006 | R-2 | 125.00 | 100.00 | 125.00 | FF | | 1.00 | 1.00 | 1.20 | 5,300.00 | 6,360.00 | 795,000 | | | | | | | |

REVIEW DATE 08/10/2021 BY RKJH Total Acres: 0.00 Total Land Value: 795,000 Market: 0 Agricultural: 0 Common: 795,000 PRINTED 08/06/2024 BY SYS

LOTS 226 & 227
IN OR 2224/218
IN OR 690 PG 1413

SMSM HOLDINGS LLC
4144 N OLCOTT AVE
NORRIDGE, IL 60706

**2024**

**00-00-31-134B-0226-0000**

## NASSAU COUNTY PROPERTY



## BUILDING CHARACTERISTICS

| ELEMENT | CD | CONSTRUCTION |
|---|---|---|
| Exterior Wall | 10 | ABOVE AVG 100 |
| Roof Structur | 08 | IRREGULAR 100 |
| Roof Cover | 03 | COMP SHNGL 100 |
| Interior Wall | 05 | DRYWALL 100 |
| Interior Floo | 15 | HARDTILE 100 |
| Air Condition | 03 | CENTRAL 100 |
| Heating Type | 04 | AIR DUCTED 100 |
| Bedrooms | | 1 100 |
| Bathrooms | | 1 100 |
| Frame | 02 | WOOD FRAME 100 |
| Stories | 2. | 2. 100 |
| Units | | 0 100 |
| Occupancy | 00 | NONE 100 |
| Quality | 05 | Quality Level 05 |
| DOR CODE | 0100 | SINGLE FAMILY |
| MAP NUM | | MKT AREA 01 |
| NEIGHBORHOOD/LOC | 1041.0100 | |

| AREA TYPE | TOTAL GROSS AREA | PCT OF BASE | TOT ADJ AREA | SUBAREA MARKET VALUE |
|---|---|---|---|---|
| BAL | 140 | 15 | 21 | 4,691 |
| FGR | 612 | 55 | 337 | 75,289 |
| FUS | 612 | 100 | 612 | 136,725 |
| UST | 72 | 45 | 32 | 7,149 |
| TOTALS | 1,436 | | 1,002 | 223,854 |

## MARKET ADJUSTMENTS

| TYPE | MDL | EFF. AREA | TOT ADJ PTS | EFF. BASE RATE | REPL. COST NEW | AYB | EYB | ECON | FNCT | | NORM | % COND |
|---|---|---|---|---|---|---|---|---|---|---|---|---|
| 0500 | 01 | 1,002 | 149.6880 | 224.53 | 224,979 | 2021 | 2021 | 0 | 0 | 0 | 0.50 | 99.50 |

3 SFR CUST – 0% - 0 Heated Area: 612 HX Base Yr

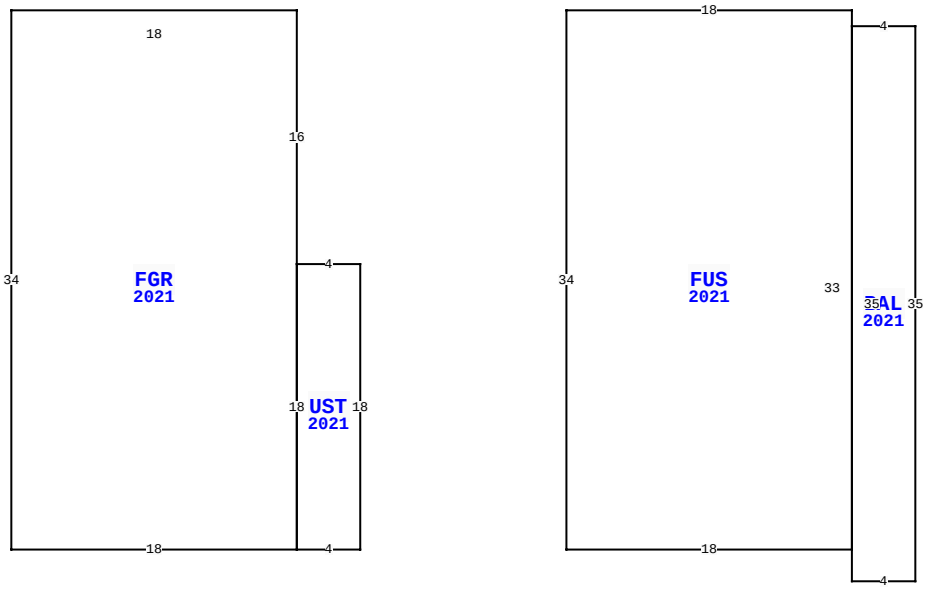


334 TARPON AVE, FERNANDINA BEACH

| | | | |
|---|---|---|---|
| BLD DATE | | LGL DATE | |
| XF DATE | | LAND DATE | 03/20/2024 MLU |
| INC DATE | | AG DATE | |

## VALUATION SUMMARY

| | |
|---|---|
| VALUATION BY | STANDARD |
| Tax Group: 2 | Tax Dist: |
| BUILDING MARKET VALUE | 1,126,988 |
| TOTAL MARKET OB/XF VALUE | 80,442 |
| TOTAL LAND VALUE - MARKET | 795,000 |
| TOTAL MARKET VALUE | 2,002,430 |
| SOH/AGL Deduction | 337,147 |
| ASSESSED VALUE | 1,665,283 |
| TOTAL EXEMPTION VALUE | 0 |
| BASE TAXABLE VALUE | 1,665,283 |
| TOTAL JUST VALUE | 2,002,430 |
| NCON VALUE | 0 |
| INCOME VALUE | |
| PREVIOUS YEAR MKT VALUE | 1,907,990 |

| PERMIT NUM | DESCRIPTION | AMT | ISSUED |
|---|---|---|---|
| 6337 | XFOB | 1,200 | 01/22/1991 |
| 1303 | REMODEL | 1,000 | 12/14/1988 |
| 2277 | REMODEL | 926 | 12/07/1988 |
| 998 | H/AC | 2,600 | 12/07/1988 |
| 5120 | REPAIR/RRF | 8,000 | 11/29/1988 |

## SALES DATA

| OFF RECORD Number | DATE | TYPE INST | Q U / | V I / | RSN CD | SALE PRICE |
|---|---|---|---|---|---|---|
| 2224/0218 | 8/22/2018 | SW | U | I | 11 | 100 |
| GRANTOR: STRAUGHN SHANNON I | | | | | | |
| GRANTEE: SMSM HOLDINGS LLC | | | | | | |
| 2224/0208 | 8/22/2018 | SW | U | I | 11 | 100 |
| GRANTOR: S MASTERS LIMITED PAR | | | | | | |
| GRANTEE: STRAUGHN SHANNON I | | | | | | |

## BUILDING NOTES

## BUILDING DIMENSIONS

FGR=[YR=2021] E18 S16 UST=[YR=2021] E4 S18 W4 N18$ S18 W18 N34$ PTR=E35 FUS=[YR=2021] E18 S1 BAL=[YR=2021] E4 S35 W4 N35$ S33 W18 N34$ W35$.

## EXTRA FEATURES

| L N | OB/XF CODE | DESCRIPTION | BLD | CAP | L | W | UNITS | UT | Adj R | ADJ UNIT PRICE | ORIG COND | YEAR ON | YEAR ACTUAL | Q | % COND | OB/XF MKT VALUE | NOTES |
|---|---|---|---|---|---|---|---|---|---|---|---|---|---|---|---|---|---|

## LAND DESCRIPTION

TOTAL OB/XF 0

| L N | USE CODE | CLS | LAND USE DESCRIPTION | CAP | R D | LOC ZONE | FRONT | DEPTH | TOT LND UTS | UNIT TYPE | D T | DPTH FACT | % COND | TOT ADJ | UNIT PRICE | ADJ UNIT PRICE | LAND VALUE | OTHER ADJUSTMENTS AND NOTES | YEAR | DENSITY | DECL | FRZ | YR | CONSRV |
|---|---|---|---|---|---|---|---|---|---|---|---|---|---|---|---|---|---|---|---|---|---|---|---|---|

REVIEW DATE 08/10/2021 BY RKJH Total Acres: 0.00 Total Land Value: 795,000 Market: 0 Agricultural: 0 Common: 795,000 PRINTED 08/06/2024 BY SYS