LOT 223
IN OR 2470/419
BEING PT OF PARCEL 2

FELLETTER JOHN P & BRENDA J
20 RIVER RD
COS COB, CT 06807

2024

00-00-31-134B-0223-0000

NASSAU COUNTY PROPERTY

BUILDING CHARACTERISTICS

ELEMENT	CD	CONSTRUCTION
Exterior Wall	15	CONC BLOCK 60
Exterior Wall	23	REINF CONC 40
Roof Structur	08	IRREGULAR 100
Roof Cover	03	COMP SHNGL 100
Interior Wall	05	DRYWALL 100
Interior Floo	14	CARPET 80
Interior Floo	12	HARDWOOD 20
Air Condition	03	CENTRAL 100
Heating Type	04	AIR DUCTED 100
Bedrooms		6 100
Bathrooms		5 100
Frame	03	MASONRY 100
Stories	2.5	2.5 100
Units		0 100
BUD8 Adjustme	02	DIST FB 100
Quality	03	Quality Level 03
DOR CODE	0800	MULTI-FAMILY
MAP NUM		MKT AREA 01
NEIGHBORHOOD/LOC	1041.00	

AREA TYPE	TOTAL GROSS AREA	PCT OF BASE	TOT ADJ AREA	SUBAREA MARKET VALUE
APT	399	100	399	56,406
APT	600	100	600	84,821
APT	744	100	744	105,178
APT	744	100	744	105,178
BAS	600	100	600	84,821
FOP	32	30	10	1,414
FOP	320	30	96	13,572
SFB	96	80	77	10,885
STR	76	10	8	1,131
UOP	24	20	5	707
TOTALS	3,635		3,283	464,113

MARKET ADJUSTMENTS

TYPE	MDL	EFF. AREA	TOT ADJ PTS	EFF. BASE RATE	REPL. COST NEW	AYB	EYB	ECON	FNCT		NORM	% COND
2801	11	3,283	129.4587	155.35	510,014	1956	2005	0	0	0	9.00	91.00

1 QUAD PLEX – 0% - 0 Heated Area: 3164 HX Base Yr

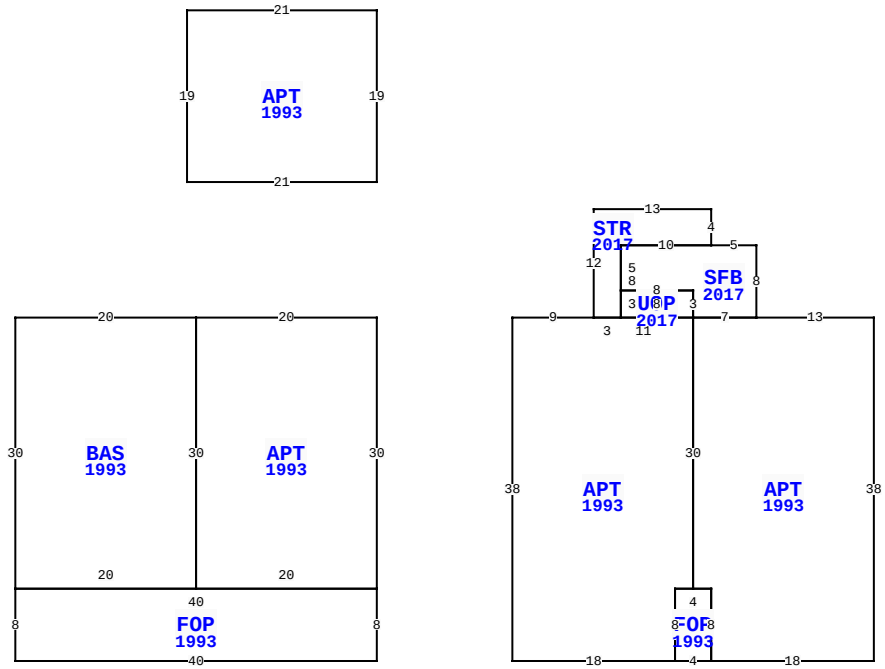

BLD DATE		LGL DATE	
XF DATE		LAND DATE	03/20/2024 MLU
INC DATE		AG DATE	

337 N FLETCHER AVE, FERNANDINA BEACH

VALUATION SUMMARY

VALUATION BY	STANDARD
Tax Group: 2	Tax Dist:
BUILDING MARKET VALUE	464,113
TOTAL MARKET OB/XF VALUE	2,912
TOTAL LAND VALUE - MARKET	265,000
TOTAL MARKET VALUE	732,025
SOH/AGL Deduction	25,573
ASSESSED VALUE	706,452
TOTAL EXEMPTION VALUE	0
BASE TAXABLE VALUE	706,452
TOTAL JUST VALUE	732,025
NCON VALUE	0
INCOME VALUE	
PREVIOUS YEAR MKT VALUE	676,852

PERMIT NUM	DESCRIPTION	AMT	ISSUED
9913-B	XFOB	5,000	07/09/1996

SALES DATA

OFF RECORD Number	DATE	TYPE INST	Q / U	V / I	RSN CD	SALE PRICE
2470/0419	6/10/2021	WD	Q	I	01	835,900
GRANTOR: MOORE EILEEN S REV TR						
GRANTEE: FELLETTER JOHN P &						
1899/1322	1/28/2014	WD	U	I	11	100
GRANTOR: MOORE EILEEN SHANNON						
GRANTEE: MOORE EILEEN SHANNO						

BUILDING NOTES

BUILDING DIMENSIONS

APT=[YR=1993] W20 BAS=[YR=1993] W20 S30 FOP=[YR=1993] S8 E40 N8 W40 $ E20 N30 $ S30 E20 N30 $ PTR= E15 APT=[YR=1993] E9 STR=[YR=2017] N12 E13 S4 SFB=[YR=2017] E5 S8 APT=[YR=1993] E13 S38 W18 FOP=[YR=1993] W4 N8 E4 S8$ N8 W2 N30 E7$ W7 UOP=[YR=2017] W8 N3 E8 S3 $ N3 W8 N5 E10$ W10 S8 W3$ E11 S30 W2 S8 W18 N38 $ W15 $ PTR= N15 APT=[YR=1993] N19 W21 S19 E21 $ S15 $.

EXTRA FEATURES

LN	OB/XF CODE	DESCRIPTION	BLD	CAP	L	W	UNITS	UT	Adj R	ADJ UNIT PRICE	ORIG COND	YEAR ON	YEAR ACTUAL	Q	% COND	OB/XF MKT VALUE	NOTES
1	0500	FP-PRE FAB	0	0	0	0	1.00	UT	3,500.00	3,500.00	100	1956	1956	3	20	700	
2	0810	CONCRETE A	0	0	29	6	174.00	SF	6.50	6.50	100	1956	1956	3	20	226	
3	0810	CONCRETE A	0	0	0	0	276.00	SF	6.50	6.50	100	1956	1956	3	20	359	
4	1241	WD DECK G	0	0	0	0	344.00	UT	15.53	15.53	100	1996	1996	3	24	1,282	
5	1241	WD DECK G	0	0	0	0	111.00	UT	15.53	15.53	100	1993	1993	3	20	345	

LAND DESCRIPTION

TOTAL OB/XF 2,912

LN	USE CODE	CLS	LAND USE DESCRIPTION	CAP	RD	LOC ZONE	FRONT	DEPTH	TOT LND UTS	UNIT TYPE	DT	DPTH FACT	% COND	TOT ADJ	UNIT PRICE	ADJ UNIT PRICE	LAND VALUE	OTHER ADJUSTMENTS AND NOTES	YEAR	DENSITY	DECL	FRZ	YR	CONSRV
1	000800	C	MULTI-FAM	0	0006	R-2	50.00	100.00	50.00	FF		1.00	1.00	1.00	5,300.00	5,300.00	265,000							

REVIEW DATE 06/06/2024 BY KBA Total Acres: 0.00 Total Land Value: 265,000 Market: 0 Agricultural: 0 Common: 265,000 PRINTED 08/06/2024 BY SYS