LOT 216
IN OR 1184/750
GA FDNA BEACH 2 UNR

PELICAN JOHN F & SARAH L
425 N FLETCHER AV
FERNANDINA BEACH, FL 32034

2024

00-00-31-134B-0216-0000

BUILDING CHARACTERISTICS

ELEMENT	CD	CONSTRUCTION
Exterior Wall	16	WD FR STUC 100
Roof Structur	08	IRREGULAR 100
Roof Cover	12	MODULAR MT 100
Interior Wall	05	DRYWALL 100
Interior Floo	12	HARDWOOD 60
Interior Floo	11	CLAY TILE 40
Air Condition	03	CENTRAL 100
Heating Type	04	AIR DUCTED 100
Bedrooms		3 100
Bathrooms		3 100
Frame	02	WOOD FRAME 100
Stories	2.5	2.5 100
Units		0 100
BUD8 Adjustme	02	DIST FB 100
Occupancy	00	NONE 100
Quality	04	Quality Level 04
DOR CODE	0100	SINGLE FAMILY
MAP NUM		MKT AREA 01
NEIGHBORHOOD/LOC	1041.00	

AREA TYPE	TOTAL GROSS AREA	PCT OF BASE	TOT ADJ AREA	SUBAREA MARKET VALUE
BAS	799	100	799	106,950
DCK	16	10	2	268
FGR	567	55	312	41,763
FOP	8	30	2	268
FOP	32	30	10	1,338
FOP	112	30	34	4,551
FOP	176	30	53	7,094
FUS	660	100	660	88,344
FUS	1,378	100	1,378	184,452
STP	40	10	4	536
TOTALS	4,196		3,329	445,603

MARKET ADJUSTMENTS

TYPE	MDL	EFF. AREA	TOT ADJ PTS	EFF. BASE RATE	REPL. COST NEW	AYB	EYB	ECON	FNCT		NORM	% COND
0900	01	3,329	115.1472	143.93	479,143	2009	2009	0	0	0	7.00	93.00

1 SNGL FAM – 100% - 2010 Heated Area: 2837 HX Base Yr 2010

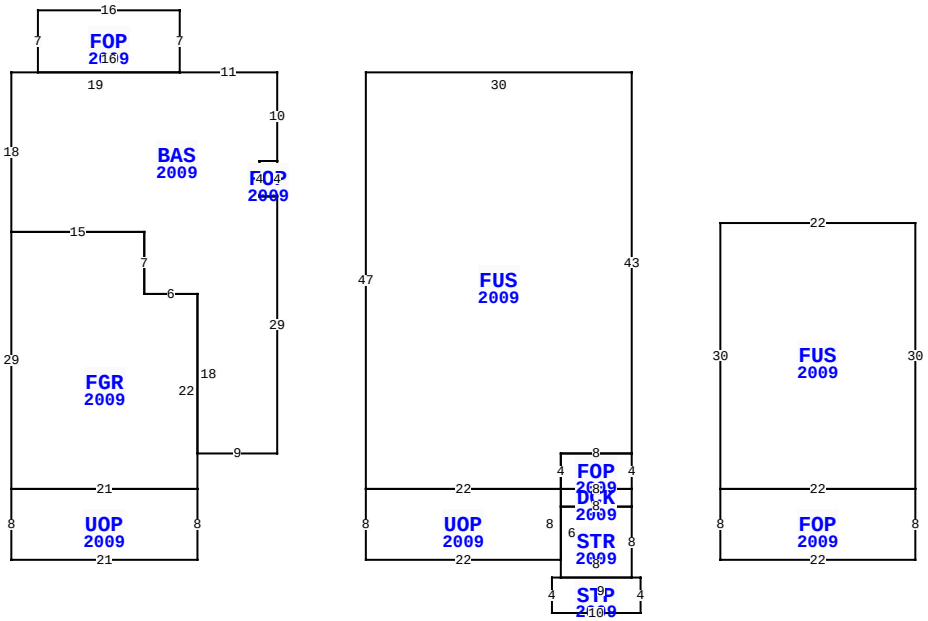

** This building has 13 Sub-Areas

425 N FLETCHER AVE, FERNANDINA BEACH

BLD DATE		LGL DATE	
XF DATE		LAND DATE	03/20/2024 MLU
INC DATE		AG DATE	

NASSAU COUNTY PROPERTY

PAGE 1 of 1 2

VALUATION SUMMARY

VALUATION BY		STANDARD
Tax Group: 2	Tax Dist:	
BUILDING MARKET VALUE		445,603
TOTAL MARKET OB/XF VALUE		12,704
TOTAL LAND VALUE - MARKET		265,000
TOTAL MARKET VALUE		723,307
SOH/AGL Deduction		344,411
ASSESSED VALUE		378,896
TOTAL EXEMPTION VALUE	HX HB	50,000
BASE TAXABLE VALUE		328,896
TOTAL JUST VALUE		723,307
NCON VALUE		0
INCOME VALUE		
PREVIOUS YEAR MKT VALUE		688,463

PERMIT NUM	DESCRIPTION	AMT	ISSUED
20182564	REMODEL	10,000	07/24/2018
20081579	H/AC	7,000	10/16/2008
20081157	OTHER	7,900	07/15/2008
20081089	ELEC OTHER	300	06/30/2008
20081066	NEW CONSTR	275,000	06/25/2008
20080998	DEMOLITION	7,500	06/10/2008

SALES DATA

OFF RECORD Number	DATE	TYPE INST	Q / U	V / I	RSN CD	SALE PRICE
1184/0750	10/28/2003	WD	Q	I		240,000
GRANTOR: DOYLE DELORES L						
GRANTEE: PELICAN JOHN F & SA						
0808/1630	10/06/1997	QC	U	I	06	25,500
GRANTOR: DOYLE ROBERT E						
GRANTEE: DOYLE DELORES L						

BUILDING NOTES

EXTRA FEATURES

LN	OB/XF CODE	DESCRIPTION	BLD	CAP	L	W	UNITS	UT	Adj R	ADJ UNIT PRICE	ORIG COND	YEAR ON	YEAR ACTUAL	Q	% COND	OB/XF MKT VALUE	NOTES
1	0855	CONC PAVER	0	100	0	0	1,140.00	SF	10.00	10.00	100	2009	2009	3	90	10,260	
2	1129	STONE 8"	0	100	80	2	160.00	SF	15.75	15.75	100	2009	2009	3	97	2,444	

BUILDING DIMENSIONS

BAS=[YR=2009] W11 FOP=[YR=2009] N7W16S7E16 $W19S18
FGR=[YR=2009] S29 UOP=[YR=2009] S8
E21N8W21$E21N22W6N7W15$E15S7E6 S18E9N29 FOP=[YR=2009]
N4W2S4E2$W2N4 E2N10$ PTR=E10 FUS=[YR=2009] S47 UOP=[YR=2009]
S8E22STR=[YR=2009] S2 STP=[YR=2009] W1S4E10N4W9$E8N8
DCK=[YR=2009] N2 FOP=[YR=2009] N4W8S4E8$W8
S2E8$W8S6$N8W22$E22N4E8N43W30$ W10$ PTR=E50 S17 FUS=[YR=2009]
S30 FOP=[YR=2009] S8E22 N8W22$ E22N30W22 $ N17W50$.

LAND DESCRIPTION

TOTAL OB/XF 12,704

LN	USE CODE	CLS	LAND USE DESCRIPTION	CAP	RD	LOC ZONE	FRONT	DEPTH	TOT LND UTS	UNIT TYPE	DT	DPTH FACT	% COND	TOT ADJ	UNIT PRICE	ADJ UNIT PRICE	LAND VALUE	OTHER ADJUSTMENTS AND NOTES	YEAR	DENSITY	DECL	FRZ	YR	CONSRV
1	000100	C	SFR	100	0006	R-2	50.00	100.00	50.00	FF		1.00	1.00	1.00	5,300.00	5,300.00	265,000							

REVIEW DATE 05/12/2019 BY KBA Total Acres: 0.00 Total Land Value: 265,000 Market: 0 Agricultural: 0 Common: 265,000 PRINTED 08/06/2024 BY SYS