LOT 150
IN OR 2574/843
GA FDNA BEACH 2 UNR

OZAKI WILLIAM DALE & JESSICA L
6590 LIGHTS FERRY ROAD
FLOWERY BRANCH, GA 30542

2024

00-00-31-134B-0150-0000

BUILDING CHARACTERISTICS

ELEMENT	CD	CONSTRUCTION
Exterior Wall	10	ABOVE AVG 50
Exterior Wall	23	REINF CONC 50
Roof Structur	03	GABLE/HIP 100
Roof Cover	12	MODULAR MT 100
Interior Wall	05	DRYWALL 100
Interior Floo	11	CLAY TILE 100
Air Condition	03	CENTRAL 100
Heating Type	04	AIR DUCTED 100
Bedrooms		5 100
Bathrooms		3 100
Frame	04	REIN CONC 100
Stories	2.	2. 100
Units		0 100
BUD8 Adjustme	02	DIST FB 100
Occupancy	00	NONE 100
Quality	04	Quality Level 04
DOR CODE	0100	SINGLE FAMILY
MAP NUM		MKT AREA 01
NEIGHBORHOOD/LOC	1041.00	

AREA TYPE	TOTAL GROSS AREA	PCT OF BASE	TOT ADJ AREA	SUBAREA MARKET VALUE
BAS	896	100	896	203,861
FOP	35	30	10	2,275
FST	36	55	20	4,551
HXB	1,316	100	1,316	299,420
HXP	84	30	25	5,689
HXP	252	30	76	17,292
HXY	48	15	7	1,592
HXY	48	15	7	1,592
HXY	168	15	25	5,689
PTO	9	5	0	0
TOTALS	2,892		2,382	541,959

MARKET ADJUSTMENTS

TYPE	MDL	EFF. AREA	TOT ADJ PTS	EFF. BASE RATE	REPL. COST NEW	AYB	EYB	ECON	FNCT		NORM	% COND
0500	11	2,382	166.2276	249.34	593,928	1958	2005	0	0	0	8.75	91.25

1 SFR CUST – 0% - 2023 Heated Area: 2212 HX Base Yr

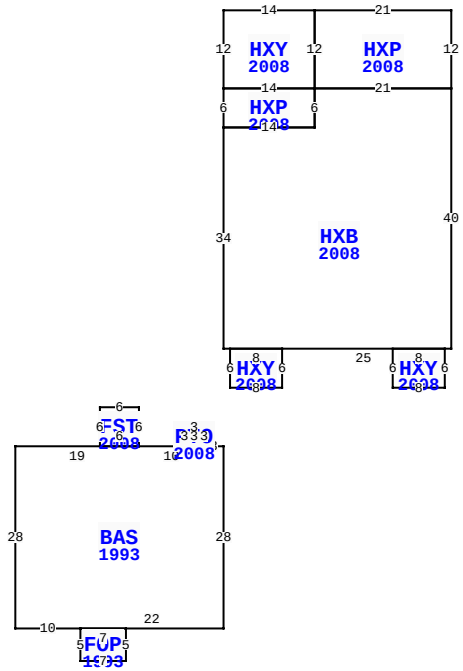

636 N FLETCHER AVE, FERNANDINA BEACH

BLD DATE		LGL DATE	
XF DATE		LAND DATE	05/22/2024 MLU
INC DATE		AG DATE	

EXTRA FEATURES

LN	OB/XF CODE	DESCRIPTION	BLD	CAP	L	W	UNITS	UT	Adj R	ADJ UNIT PRICE	ORIG COND	YEAR ON	YEAR ACTUAL	Q	% COND	OB/XF MKT VALUE	NOTES
1	0810	CONCRETE A	0	0	44	3	132.00	SF	6.50	6.50	100	2008	2008	3	89	764	
2	0810	CONCRETE A	0	0	0	0	58.00	SF	6.50	6.50	100	2008	2008	3	89	336	
3	0811	CONCRETE B	0	0	0	0	804.00	SF	5.20	5.20	100	2008	2008	3	89	3,721	
4	1242	WD DECK A	0	0	7	4	28.00	SF	12.50	12.50	100	2008	2008	3	35	123	

NASSAU COUNTY PROPERTY

PAGE 1 of 1 2

VALUATION SUMMARY

VALUATION BY	STANDARD
Tax Group: 2	Tax Dist:
BUILDING MARKET VALUE	541,959
TOTAL MARKET OB/XF VALUE	4,944
TOTAL LAND VALUE - MARKET	350,000
TOTAL MARKET VALUE	896,903
SOH/AGL Deduction	46,944
ASSESSED VALUE	849,959
TOTAL EXEMPTION VALUE	0
BASE TAXABLE VALUE	849,959
TOTAL JUST VALUE	896,903
NCON VALUE	0
INCOME VALUE	
PREVIOUS YEAR MKT VALUE	772,690

PERMIT NUM	DESCRIPTION	AMT	ISSUED
20080773	GAS	575	05/07/2008
20072201	OTHER	5,000	12/10/2007
20071976	H/AC	7,000	10/18/2007
20071945	ELEC OTHER	4,100	10/12/2007
20071533	ADDITION	355,170	08/17/2007
7994	REPAIR/RRF	1,320	11/22/1993

SALES DATA

OFF RECORD Number	DATE	TYPE INST	Q U	V I	RSN CD	SALE PRICE
2574/0843	6/30/2022	WD	Q	I	02	917,500
GRANTOR: ROLLINS CAROLYN M EST						
GRANTEE: OZAKI WILLIAM DALE						
1894/0129	12/17/2013	QC	U	I	11	100
GRANTOR: ROLLINS CAROLYN M						
GRANTEE: ROLLINS CAROLYN M						

BUILDING NOTES

BUILDING DIMENSIONS

BAS=[YR=1993] W3 PTO=[YR=2008] N3 W3 S3 E3 $ W10
FST=[YR=2008] N6 W6 S6 E6$ W19 S28 E10 FOP=[YR=1993] S5 E7 N5 W7$ E22 N28$ PTR=N15 HXB=[YR=2008] N34 HXP=[YR=2008] N6 HXY=[YR=2008] N12 E14 HXP=[YR=2008] E21 S12 W21 N12$ S12 W14$ E14 S6 W14$ E14 N6 E21 S40 W1 HXY=[YR=2008] S6 W8 N6 E8$ W25 HXY=[YR=2008] S6 W8 N6 E8$ W9$ S15$.

LAND DESCRIPTION

TOTAL OB/XF 4,944

LN	USE CODE	CLS	LAND USE DESCRIPTION	CAP	RD	LOC ZONE	FRONT	DEPTH	TOT LND UTS	UNIT TYPE	DT	DPTH FACT	% COND	TOT ADJ	UNIT PRICE	ADJ UNIT PRICE	LAND VALUE	OTHER ADJUSTMENTS AND NOTES	YEAR	DENSITY	DECL	FRZ	YR	CONSRV
1	000800	C	MULTI-FAM	0		R-2	50.00	100.00	50.00	FF		1.00	1.00	1.00	7,000.00	7,000.00	350,000							

REVIEW DATE 09/26/2019 BY DJA Total Acres: 0.00 Total Land Value: 350,000 Market: 0 Agricultural: 0 Common: 350,000 PRINTED 08/06/2024 BY SYS