N1/2 LOT 4
IN OR 2674/483
DUNEWOOD SUB PB 5/182

PETERS ROBERT
PO BOX 15163
FERNANDINA BEACH, FL 32035

2024

00-00-31-1235-0004-0000

NASSAU COUNTY PROPERTY

BUILDING CHARACTERISTICS

ELEMENT	CD	CONSTRUCTION
Exterior Wall	05	AVERAGE 60
Exterior Wall	12	CEDAR 40
Roof Structur	03	GABLE/HIP 100
Roof Cover	03	COMP SHNGL 100
Interior Wall	05	DRYWALL 100
Interior Floo	14	CARPET 80
Interior Floo	08	SHT VINYL 20
Air Condition	03	CENTRAL 100
Heating Type	04	AIR DUCTED 100
Bedrooms		4 100
Bathrooms		3 100
Frame	02	WOOD FRAME 100
Stories	2.	2. 100
Units		0 100
Occupancy	00	NONE 100
Quality	03	Quality Level 03
DOR CODE	0800	MULTI-FAMILY
MAP NUM		MKT AREA 01
NEIGHBORHOOD/LOC	1043.00	

AREA TYPE	TOTAL GROSS AREA	PCT OF BASE	TOT ADJ AREA	SUBAREA MARKET VALUE
BAL	40	15	6	568
BAS	608	100	608	57,555
FGR	240	55	132	12,496
FOP	40	30	12	1,136
FUS	672	100	672	63,613
PTO	20	5	1	95
PTO	100	5	5	473
UST	32	45	14	1,325
TOTALS	1,752		1,450	137,261

MARKET ADJUSTMENTS

TYPE	MDL	EFF. AREA	TOT ADJ PTS	EFF. BASE RATE	REPL. COST NEW	AYB	EYB	ECON	FNCT		NORM	% COND
0320	01	1,450	118.9760	113.03	163,894	1989	1989	0	0	0	16.25	83.75

1 TOWNHOUSE – 0% - 2024 Heated Area: 1280 HX Base Yr

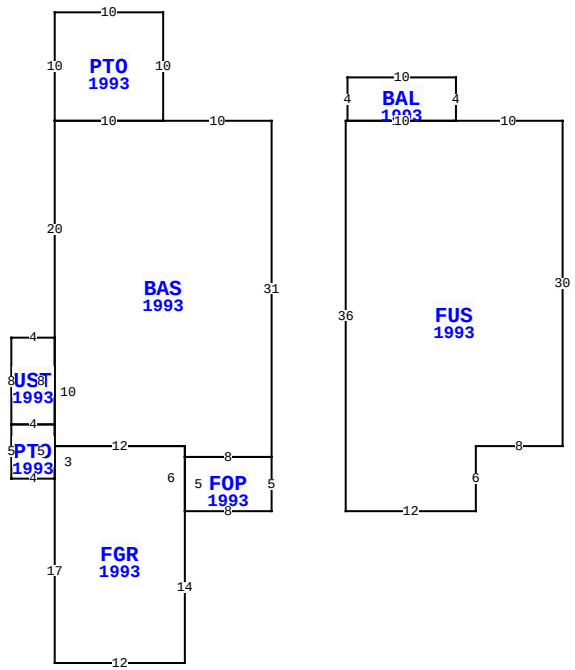

2338 1ST AVE, FERNANDINA BEACH

BLD DATE	04/02/2014 KK	LGL DATE	
XF DATE		LAND DATE	03/13/2024 MLU
INC DATE		AG DATE	

VALUATION SUMMARY

VALUATION BY	STANDARD
Tax Group: 2	Tax Dist:
BUILDING MARKET VALUE	137,261
TOTAL MARKET OB/XF VALUE	2,268
TOTAL LAND VALUE - MARKET	157,500
TOTAL MARKET VALUE	297,029
SOH/AGL Deduction	0
ASSESSED VALUE	297,029
TOTAL EXEMPTION VALUE	0
BASE TAXABLE VALUE	297,029
TOTAL JUST VALUE	297,029
NCON VALUE	0
INCOME VALUE	
PREVIOUS YEAR MKT VALUE	541,147

PERMIT NUM	DESCRIPTION	AMT	ISSUED
20070545	REPAIR/RRF	5,000	04/04/2007
1003	H/AC	3,500	12/19/1988
2291	NEW CONSTR	3,020	12/19/1988
1299	NEW CONSTR	4,200	12/14/1988
5121	NEW CONSTR	92,400	11/30/1988

SALES DATA

OFF RECORD Number	DATE	TYPE INST	Q / U	V / I	RSN CD	SALE PRICE
2674/483	10/16/2023	WD	U	I	11	100
GRANTOR: JORJ						
GRANTEE: PETERS ROBERT						
0877/1211	4/06/1999	WD	U	I	06	100
GRANTOR: PETERS JEFFREY J & RO						
GRANTEE: JORJ						

BUILDING NOTES

BUILDING DIMENSIONS

FUS=[YR=1993;ORIG=-3.2,-4] E10 S30 W8 S6 W12 N36 E10 $
BAS=[YR=1993;ORIG=-20,-4] W10 W10 S20 S10 E12 S1 E8 N31 $
FGR=[YR=1993;ORIG=-40,29] S17 E12 N14 N6 W12 S3 $
PTO=[YR=1993;ORIG=-30,-4] N10 W10 S10 E10 $
FOP=[YR=1993;ORIG=-28,32] E8 N5 W8 S5 $
BAL1993=[ORIG=-13,-8] E10 S4 W10 N4 $
UST=[YR=1993;ORIG=-40,16] W4 S8 E4 N8 $
PTO=[YR=1993;ORIG=-44,24] S5 E4 N5 W4 $
.

EXTRA FEATURES

LN	OB/XF CODE	DESCRIPTION	BLD	CAP	L	W	UNITS	UT	Adj R	ADJ UNIT PRICE	ORIG COND	YEAR ON	YEAR ACTUAL	Q	% COND	OB/XF MKT VALUE	NOTES
4	0810	CONCRETE A	0	0	24	3	72.00	SF	6.50	6.50	100	1989	1989	3	57	267	
5	0811	CONCRETE B	1	0	0	0	675.00	SF	5.20	5.20	100	2024	1989		57	2,001	

LAND DESCRIPTION

TOTAL OB/XF 2,268

LN	USE CODE	CLS	LAND USE DESCRIPTION	CAP	RD	LOC ZONE	FRONT	DEPTH	TOT LND UTS	UNIT TYPE	DT	DPTH FACT	% COND	TOT ADJ	UNIT PRICE	ADJ UNIT PRICE	LAND VALUE	OTHER ADJUSTMENTS AND NOTES	YEAR	DENSITY	DECL	FRZ	YR	CONSRV
1	000310	C	TOWNHOUSE2	0	0006	R-2	35.00	107.00	35.00	FF		1.00	1.00	1.00	4,500.00	4,500.00	157,500							

REVIEW DATE 08/26/2019 BY DJA Total Acres: 0.00 Total Land Value: 157,500 Market: 0 Agricultural: 0 Common: 157,500 PRINTED 08/06/2024 BY SYS