LOTS 22 & 23 EX S-1
IN OR 2072/1681 & OR 2072/1685
INSIDE CITY LIMITS

HALLMARK POST OAK LLC/
3111 PACES MILL RD STE A250
ATLANTA, GA 30339

2024

00-00-31-1180-0022-0000

BUILDING CHARACTERISTICS

ELEMENT	CD	CONSTRUCTION
Exterior Wall	05	AVERAGE 50
Exterior Wall	20	FACE BRICK 50
Roof Structur	03	GABLE/HIP 100
Roof Cover	03	COMP SHNGL 100
Interior Wall	05	DRYWALL 100
Interior Floo	14	CARPET 80
Interior Floo	08	SHT VINYL 20
Air Condition	03	CENTRAL 100
Heating Type	04	AIR DUCTED 100
Bedrooms		2 100
Bathrooms		1.5 100
Frame	02	WOOD FRAME 100
Story Height		0 100
RMS		0 100
Units		8 100
Quality	03	Quality Level 03

DOR CODE	0300	MULTI-FAMILY	
MAP NUM		MKT AREA	01
NEIGHBORHOOD/LOC	1001.00		

AREA TYPE	TOTAL GROSS AREA	PCT OF BASE	TOT ADJ AREA	SUBAREA MARKET VALUE
BAS	3,973	100	3,973	292,127
FOP	65	30	20	1,470
FOP	65	30	20	1,470
FOP	80	30	24	1,764
FOP	80	30	24	1,764
FOP	80	30	24	1,764
FOP	80	30	24	1,764
FOP	80	30	24	1,764
FOP	85	30	26	1,912
FOP	92	30	28	2,059
TOTALS	7,717		7,108	522,638

MARKET ADJUSTMENTS

TYPE	MDL	EFF. AREA	TOT ADJ PTS	EFF. BASE RATE	REPL. COST NEW	AYB	EYB	ECON	FNCT		NORM	% COND
0301	03	7,108	107.3630	91.26	648,676	1991	1991	0	0	0	19.43	80.57

1 APARTMENT - 0% - 0 Heated Area: 6806 HX Base Yr

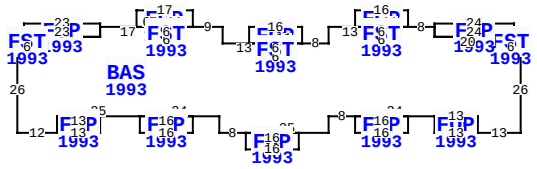

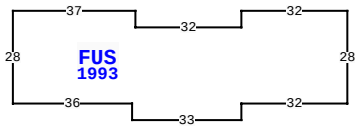

** This building has 17 Sub-Areas

996 CITRONA DR, FERNANDINA BEACH

BLD DATE	06/11/2018	KK	LGL DATE		
XF DATE	06/11/2018	KK	LAND DATE	06/11/2018	KK
INC DATE			AG DATE		

NASSAU COUNTY PROPERTY

PAGE 1 of 6 2

VALUATION SUMMARY

VALUATION BY	DIRECT_CAP
Tax Group: 2	Tax Dist:
BUILDING MARKET VALUE	1,574,141
TOTAL MARKET OB/XF VALUE	0
TOTAL LAND VALUE - MARKET	0
TOTAL MARKET VALUE	1,943,384
SOH/AGL Deduction	749,478
ASSESSED VALUE	1,193,906
TOTAL EXEMPTION VALUE	0
BASE TAXABLE VALUE	1,193,906
TOTAL JUST VALUE	1,943,384
NCON VALUE	0
INCOME VALUE	1,943,384
PREVIOUS YEAR MKT VALUE	1,085,369

PERMIT NUM	DESCRIPTION	AMT	ISSUED
20162383	REMODEL	1,144,773	08/30/2016
20130774	H/AC	1,500	04/12/2013
20101944	ELEC OTHER	600	11/09/2010
20101402	REPAIR/RRF	11,285	08/24/2010
20101323	H/AC	1,000	08/10/2010
20071495	REPAIR/RRF	4,800	08/10/2007

SALES DATA

OFF RECORD Number	DATE	TYPE INST	Q / U	V / I	RSN CD	SALE PRICE
2072/1685	9/20/2016	QC	U	I	11	100
GRANTOR: OCEAN VIEW APARTMENTS						
GRANTEE: HALLMARK POST OAK L						
2072/1681	9/20/2016	SW	U	I	30	1,384,800
GRANTOR: OCEAN VIEW APARTMENTS						
GRANTEE: HALLMARK POST OAK L						

BUILDING NOTES

EXTRA FEATURES

LN	OB/XF CODE	DESCRIPTION	BLD	CAP	L	W	UNITS	UT	Adj R	ADJ UNIT PRICE	ORIG COND	YEAR ON	YEAR ACTUAL	Q	% COND	OB/XF MKT VALUE	NOTES
1	0803	ASPHALT C	0	0	0	0	31,345.00	SF	2.00	2.00	100	2001	2001	3	50	31,345	
2	0812	CONCRETE C	0	0	0	0	6,872.00	SF	4.00	4.00	100	1991	1991	3	62	17,043	
3	0422	CL FNC 4'	0	0	0	0	76.00	LF	15.00	15.00	100	1991	1991	3	28	319	
4	0972	ST LGHT UN	0	0	0	0	4.00	UT	2,530.00	2,530.00	100	1991	1991	3	29	2,935	
5	0680	POLE SHED	0	0	8	4	32.00	SF	10.00	10.00	100	1991	1991	3	20	64	
6	0963	FIRE HYDR	0	0	0	0	1.00	UT	1,500.00	1,500.00	100	1991	1991	3	100	1,500	
7	0400	CONC CURB	0	0	0	0	1,318.00	LF	15.00	15.00	100	1991	1991	3	70	13,839	
8	4950	BOLLARD	0	0	0	0	6.00	UT	100.00	100.00	100	1991	1991	3	100	600	
9	0476	VF 6 SBPL	0	0	0	0	75.00	LF	32.00	32.00	100	2017	2017	3	92	2,208	
10	0810	CONCRETE A	0	0	0	0	469.00	SF	6.50	6.50	100	2017	2017	3	97	2,957	

TOTAL OB/XF 72,810

BUILDING DIMENSIONS

FST=[YR=1993] W2FOP=[YR=1993] N4W24S1 BAS=[YR=1993] W8 FOP=[YR=1993] N5W16S5E5 FST=[YR=1993] S4E6N4W6$E11$W5S4W6N4 W13S5W8FOP=[YR=1993] N5W16S5E5 FST=[YR=1993] S4E6N4W6$E11$W5S4W6 N4 W13N5W9FOP=[YR=1993] N5W17S5E6 FST=[YR=1993] S4E6N4W6$E11$W5S4W6N4 W17FOP=[YR=1993] N1W23S4FST=[YR=1993] W2S3 E6N3W4$E23N3$S3W19S3W6S26E12 FOP=[YR=1993] E13N5W13S5$N5E25 FOP=[YR=1993] S5E16N5W16$E24 S5 E8 FOP=[YR=1993] S5E16N5W16$E25 N5E8 FOP=[YR=1993] S5E16N5W16$E24 FOP=[YR=1993] S5E13N5W13$E13 S5 E13 N26W6 N3W20N3$S3E24$W4S3E6N3$ PTR=E20FUS=[YR=1993] E37S5E32N5E32 S28W32S5 W33N5W36N28$W20$.

LAND DESCRIPTION

LN	USE CODE	CLS	LAND USE DESCRIPTION	CAP	RD	LOC ZONE	FRONT	DEPTH	TOT LND UTS	UNIT TYPE	DT	DPTH FACT	% COND	TOT ADJ	UNIT PRICE	ADJ UNIT PRICE	LAND VALUE	OTHER ADJUSTMENTS AND NOTES	YEAR	DENSITY	DECL	FRZ	YR	CONSRV
1	000300	C	MULTI-FAM	0	0003	R-1	0.00	0.00	42.00	UT		1.00	1.00	1.00	4,500.00	4,500.00	189,000							

REVIEW DATE 06/05/2024 BY KBA Total Acres: 0.00 Total Land Value: 369,243 Market: 0 Agricultural: 0 Common: 0 PRINTED 08/06/2024 BY SYS

LOTS 22 & 23 EX S-1
IN OR 2072/1681 & OR 2072/1685
INSIDE CITY LIMITS

HALLMARK POST OAK LLC/
3111 PACES MILL RD STE A250
ATLANTA, GA 30339

2024

00-00-31-1180-0022-0000

BUILDING CHARACTERISTICS

ELEMENT	CD	CONSTRUCTION
Exterior Wall	05	AVERAGE 50
Exterior Wall	20	FACE BRICK 50
Roof Structur	03	GABLE/HIP 100
Roof Cover	03	COMP SHNGL 100
Interior Wall	05	DRYWALL 100
Interior Floo	14	CARPET 80
Interior Floo	08	SHT VINYL 20
Air Condition	03	CENTRAL 100
Heating Type	04	AIR DUCTED 100
Bedrooms		2 100
Bathrooms		1.5 100
Frame	02	WOOD FRAME 100
Story Height		0 100
RMS		0 100
Units		8 100
Quality	03	Quality Level 03
DOR CODE	0300	MULTI-FAMILY
MAP NUM		MKT AREA 01
NEIGHBORHOOD/LOC	1001.00	

AREA TYPE	TOTAL GROSS AREA	PCT OF BASE	TOT ADJ AREA	SUBAREA MARKET VALUE
BAS	3,804	100	3,804	279,701
FOP	65	30	20	1,470
FOP	65	30	20	1,470
FOP	80	30	24	1,764
FOP	80	30	24	1,764
FOP	80	30	24	1,764
FOP	80	30	24	1,764
FOP	80	30	24	1,764
FOP	80	30	24	1,764
FOP	92	30	28	2,059
TOTALS	7,394		6,791	499,330

MARKET ADJUSTMENTS

TYPE	MDL	EFF. AREA	TOT ADJ PTS	EFF. BASE RATE	REPL. COST NEW	AYB	EYB	ECON	FNCT		NORM	% COND
0301	03	6,791	107.3630	91.26	619,747	1991	1991	0	0	0	19.43	80.57

2 APARTMENT – 0% - 0 Heated Area: 6492 HX Base Yr

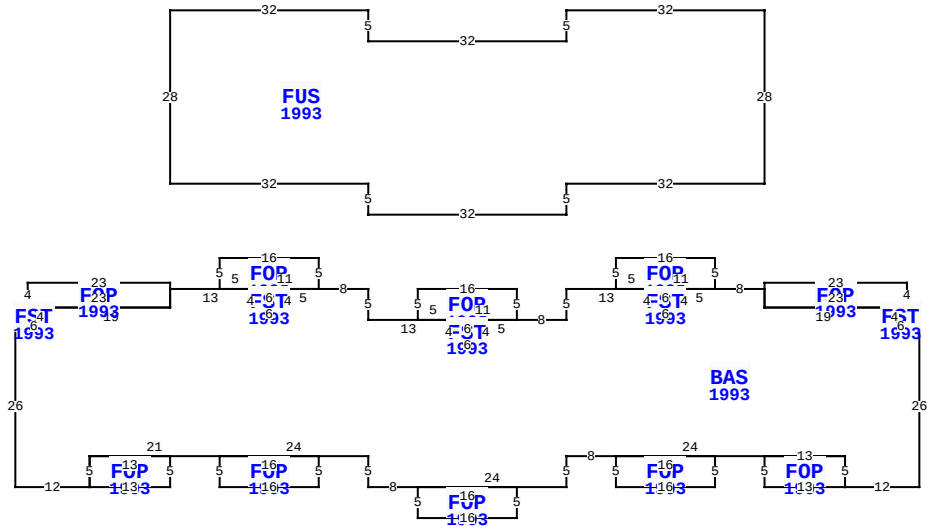

** This building has 17 Sub-Areas

996 CITRONA DR, FERNANDINA BEACH

BLD DATE	06/11/2018	KK	LGL DATE	
XF DATE	06/11/2018	KK	LAND DATE	06/11/2018 KK
INC DATE			AG DATE	

NASSAU COUNTY PROPERTY

PAGE 2 of 6 2

VALUATION SUMMARY

VALUATION BY	DIRECT_CAP
Tax Group: 2	Tax Dist:
BUILDING MARKET VALUE	1,574,141
TOTAL MARKET OB/XF VALUE	0
TOTAL LAND VALUE - MARKET	0
TOTAL MARKET VALUE	1,943,384
SOH/AGL Deduction	749,478
ASSESSED VALUE	1,193,906
TOTAL EXEMPTION VALUE	0
BASE TAXABLE VALUE	1,193,906
TOTAL JUST VALUE	1,943,384
NCON VALUE	0
INCOME VALUE	1,943,384
PREVIOUS YEAR MKT VALUE	1,085,369

PERMIT NUM	DESCRIPTION	AMT	ISSUED
20062477	REPAIR/RRF	63,411	11/07/2006
20034211	OTHER	1,000	12/01/2003
6101	NEW CONSTR	1,076,560	08/01/1990

SALES DATA

OFF RECORD Number	DATE	TYPE INST	Q / U	V / I	RSN CD	SALE PRICE
2072/1685	9/20/2016	QC	U	I	11	100
GRANTOR: OCEAN VIEW APARTMENTS						
GRANTEE: HALLMARK POST OAK L						
2072/1681	9/20/2016	SW	U	I	30	1,384,800
GRANTOR: OCEAN VIEW APARTMENTS						
GRANTEE: HALLMARK POST OAK L						

BUILDING NOTES

EXTRA FEATURES

LN	OB/XF CODE	DESCRIPTION	BLD	CAP	L	W	UNITS	UT	Adj R	ADJ UNIT PRICE	ORIG COND	YEAR ON	YEAR ACTUAL	Q	% COND	OB/XF MKT VALUE	NOTES
11	0810	CONCRETE A	0	0	24	5	120.00	SF	6.50	6.50	100	2017	2017	3	97	757	
12	0402	CONC BUMPE	0	0	0	0	1.00	UT	25.00	25.00	100	1991	1991	3	70	18	
13	0402	CONC BUMPE	0	0	0	0	3.00	UT	25.00	25.00	100	2017	2017	3	98	74	

BUILDING DIMENSIONS

FST=[YR=1993] W2FOP=[YR=1993] N4W23S1 BAS=[YR=1993] W8
FOP=[YR=1993] N5W16S5E5 FST=[YR=1993] S4E6N4W6$E11$W5S4W6N4
W13S5W8FOP=[YR=1993] N5W16S5E5 FST=[YR=1993]
S4E6N4W6$E11$W5S4W6 N4 W13N5W8FOP=[YR=1993] N5W16S5E5
FST=[YR=1993] S4E6N4W6$E11$W5S4W6N4 W13FOP=[YR=1993]
N1W23S4FST=[YR=1993] W2S3 E6N3W4$E23N3$S3W19S3W6S26E12
FOP=[YR=1993] E13N5W13S5$N5E21 FOP=[YR=1993]
S5E16N5W16$E24S5E8 FOP=[YR=1993] S5E16N5W16$E24N5E8
FOP=[YR=1993] S5E16N5W16$E24FOP=[YR=1993]
S5E13N5W13$E13S5E12N26W6N3W19 N3$S3E23$W4S3E6N3$PTR=N20W25
FUS=[YR=1993] N28W32S5W32N5W32S28E32 S5E32N5E32$S20E25$.

LAND DESCRIPTION

TOTAL OB/XF 849

LN	USE CODE	CLS	LAND USE DESCRIPTION	CAP	RD	LOC ZONE	FRONT	DEPTH	TOT LND UTS	UNIT TYPE	DT	DPTH FACT	% COND	TOT ADJ	UNIT PRICE	ADJ UNIT PRICE	LAND VALUE	OTHER ADJUSTMENTS AND NOTES	YEAR	DENSITY	DECL	FRZ	YR	CONSRV

REVIEW DATE 06/05/2024 BY KBA Total Acres: 0.00 Total Land Value: 369,243 Market: 0 Agricultural: 0 Common: 0 PRINTED 08/06/2024 BY SYS

LOTS 22 & 23 EX S-1
IN OR 2072/1681 & OR 2072/1685
INSIDE CITY LIMITS

HALLMARK POST OAK LLC/
3111 PACES MILL RD STE A250
ATLANTA, GA 30339

2024

00-00-31-1180-0022-0000

BUILDING CHARACTERISTICS

ELEMENT	CD	CONSTRUCTION
Exterior Wall	05	AVERAGE 50
Exterior Wall	20	FACE BRICK 50
Roof Structur	03	GABLE/HIP 100
Roof Cover	03	COMP SHNGL 100
Interior Wall	05	DRYWALL 100
Interior Floo	14	CARPET 80
Interior Floo	08	SHT VINYL 20
Air Condition	03	CENTRAL 100
Heating Type	04	AIR DUCTED 100
Bedrooms		2 100
Bathrooms		1.5 100
Frame	02	WOOD FRAME 100
Story Height		0 100
RMS		0 100
Units		8 100
Quality	03	Quality Level 03
DOR CODE	0300	MULTI-FAMILY
MAP NUM		MKT AREA 01
NEIGHBORHOOD/LOC	1001.00	

AREA TYPE	TOTAL GROSS AREA	PCT OF BASE	TOT ADJ AREA	SUBAREA MARKET VALUE
BAS	3,804	100	3,804	279,701
FOP	65	30	20	1,470
FOP	65	30	20	1,470
FOP	80	30	24	1,764
FOP	80	30	24	1,764
FOP	80	30	24	1,764
FOP	80	30	24	1,764
FOP	80	30	24	1,764
FOP	80	30	24	1,764
FOP	92	30	28	2,059
TOTALS	7,394		6,791	499,330

MARKET ADJUSTMENTS

TYPE	MDL	EFF. AREA	TOT ADJ PTS	EFF. BASE RATE	REPL. COST NEW	AYB	EYB	ECON	FNCT		NORM	% COND
0301	03	6,791	107.3630	91.26	619,747	1991	1991	0	0	0	19.43	80.57

3 APARTMENT – 0% - 0 Heated Area: 6492 HX Base Yr

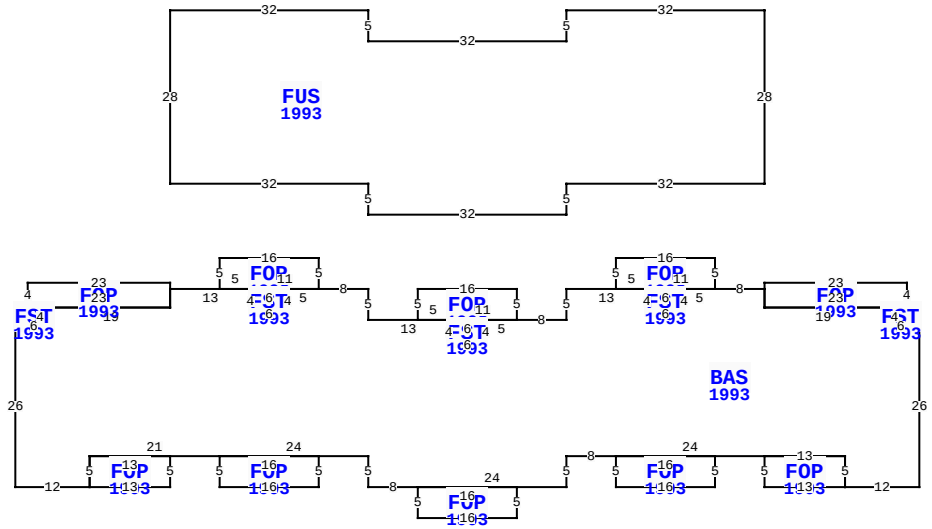

** This building has 17 Sub-Areas

996 CITRONA DR, FERNANDINA BEACH

BLD DATE	06/11/2018	KK	LGL DATE	
XF DATE	06/11/2018	KK	LAND DATE	06/11/2018 KK
INC DATE			AG DATE	

NASSAU COUNTY PROPERTY

PAGE 3 of 6 2

VALUATION SUMMARY

VALUATION BY	DIRECT_CAP
Tax Group: 2	Tax Dist:
BUILDING MARKET VALUE	1,574,141
TOTAL MARKET OB/XF VALUE	0
TOTAL LAND VALUE - MARKET	0
TOTAL MARKET VALUE	1,943,384
SOH/AGL Deduction	749,478
ASSESSED VALUE	1,193,906
TOTAL EXEMPTION VALUE	0
BASE TAXABLE VALUE	1,193,906
TOTAL JUST VALUE	1,943,384
NCON VALUE	0
INCOME VALUE	1,943,384
PREVIOUS YEAR MKT VALUE	1,085,369

PERMIT NUM	DESCRIPTION	AMT	ISSUED

SALES DATA

OFF RECORD Number	DATE	TYPE INST	Q U	V I	RSN CD	SALE PRICE
2072/1685	9/20/2016	QC	U	I	11	100
GRANTOR: OCEAN VIEW APARTMENTS						
GRANTEE: HALLMARK POST OAK L						
2072/1681	9/20/2016	SW	U	I	30	1,384,800
GRANTOR: OCEAN VIEW APARTMENTS						
GRANTEE: HALLMARK POST OAK L						

BUILDING NOTES

BUILDING DIMENSIONS

FST=[YR=1993] W2FOP=[YR=1993] N4W23S1 BAS=[YR=1993] W8
FOP=[YR=1993] N5W16S5E5 FST=[YR=1993] S4E6N4W6$E11$W5S4W6N4
W13S5W8FOP=[YR=1993] N5W16S5E5 FST=[YR=1993]
S4E6N4W6$E11$W5S4W6 N4 W13N5W8FOP=[YR=1993] N5W16S5E5
FST=[YR=1993] S4E6N4W6$E11$W5S4W6N4 W13FOP=[YR=1993]
N1W23S4FST=[YR=1993] W2S3 E6N3W4$E23N3$S3W19S3W6S26E12
FOP=[YR=1993] E13N5W13S5$N5E21 FOP=[YR=1993]
S5E16N5W16$E24S5E8 FOP=[YR=1993] S5E16N5W16$E24N5E8
FOP=[YR=1993] S5E16N5W16$E24FOP=[YR=1993]
S5E13N5W13$E13S5E12N26W6N3W19 N3$S3E23$W4S3E6N3$PTR=N20W25
FUS=[YR=1993] N28W32S5W32N5W32S28E32 S5E32N5E32$E25S20$.

EXTRA FEATURES

LN	OB/XF CODE	DESCRIPTION	BLD	CAP	L	W	UNITS	UT	Adj R	ADJ UNIT PRICE	ORIG COND	YEAR ON	YEAR ACTUAL	Q	% COND	OB/XF MKT VALUE	NOTES

LAND DESCRIPTION

TOTAL OB/XF 0

LN	USE CODE	CLS	LAND USE DESCRIPTION	CAP	RD	LOC ZONE	FRONT	DEPTH	TOT LND UTS	UNIT TYPE	DT	DPTH FACT	% COND	TOT ADJ	UNIT PRICE	ADJ UNIT PRICE	LAND VALUE	OTHER ADJUSTMENTS AND NOTES	YEAR	DENSITY	DECL	FRZ	YR	CONSRV

REVIEW DATE 06/05/2024 BY KBA Total Acres: 0.00 Total Land Value: 369,243 Market: 0 Agricultural: 0 Common: 0 PRINTED 08/06/2024 BY SYS

LOTS 22 & 23 EX S-1
IN OR 2072/1681 & OR 2072/1685
INSIDE CITY LIMITS

HALLMARK POST OAK LLC/
3111 PACES MILL RD STE A250
ATLANTA, GA 30339

2024

00-00-31-1180-0022-0000

BUILDING CHARACTERISTICS

ELEMENT	CD	CONSTRUCTION
Exterior Wall	05	AVERAGE 50
Exterior Wall	20	FACE BRICK 50
Roof Structur	03	GABLE/HIP 100
Roof Cover	03	COMP SHNGL 100
Interior Wall	05	DRYWALL 100
Interior Floo	14	CARPET 80
Interior Floo	08	SHT VINYL 20
Air Condition	03	CENTRAL 100
Heating Type	04	AIR DUCTED 100
Bedrooms		2 100
Bathrooms		1.5 100
Frame	02	WOOD FRAME 100
Story Height		0 100
RMS		0 100
Units		8 100
Quality	03	Quality Level 03
DOR CODE	0300	MULTI-FAMILY
MAP NUM		MKT AREA 01
NEIGHBORHOOD/LOC	1001.00	

AREA TYPE	TOTAL GROSS AREA	PCT OF BASE	TOT ADJ AREA	SUBAREA MARKET VALUE
BAS	3,804	100	3,804	279,701
FOP	65	30	20	1,470
FOP	65	30	20	1,470
FOP	80	30	24	1,764
FOP	80	30	24	1,764
FOP	80	30	24	1,764
FOP	80	30	24	1,764
FOP	80	30	24	1,764
FOP	80	30	24	1,764
FOP	92	30	28	2,059
TOTALS	7,394		6,791	499,330

MARKET ADJUSTMENTS

TYPE	MDL	EFF. AREA	TOT ADJ PTS	EFF. BASE RATE	REPL. COST NEW	AYB	EYB	ECON	FNCT		NORM	% COND
0301	03	6,791	107.3630	91.26	619,747	1991	1991	0	0	0	19.43	80.57

4 APARTMENT – 0% - 0 Heated Area: 6492 HX Base Yr

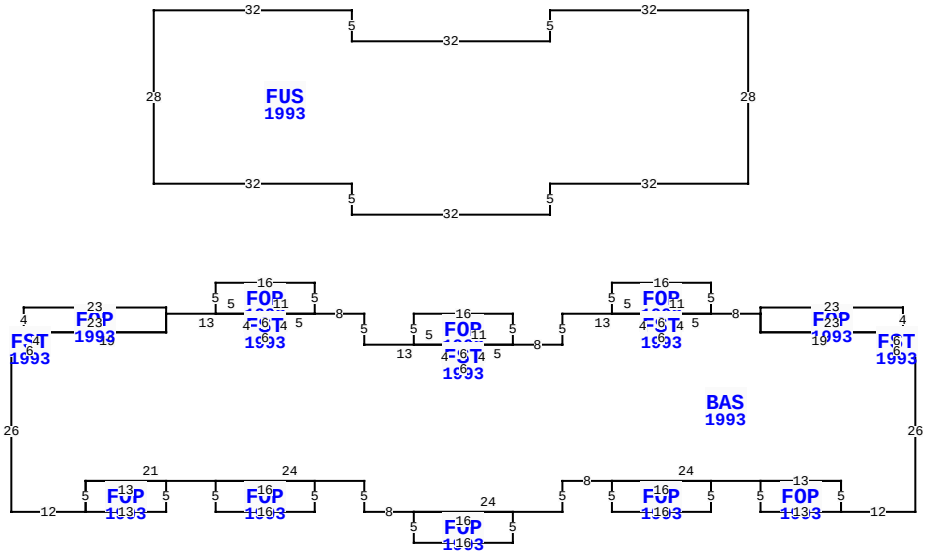

** This building has 17 Sub-Areas

996 CITRONA DR, FERNANDINA BEACH

BLD DATE	06/11/2018	KK	LGL DATE	
XF DATE	06/11/2018	KK	LAND DATE	06/11/2018 KK
INC DATE			AG DATE	

NASSAU COUNTY PROPERTY

PAGE 4 of 6 2

VALUATION SUMMARY

VALUATION BY	DIRECT_CAP
Tax Group: 2	Tax Dist:
BUILDING MARKET VALUE	1,574,141
TOTAL MARKET OB/XF VALUE	0
TOTAL LAND VALUE - MARKET	0
TOTAL MARKET VALUE	1,943,384
SOH/AGL Deduction	749,478
ASSESSED VALUE	1,193,906
TOTAL EXEMPTION VALUE	0
BASE TAXABLE VALUE	1,193,906
TOTAL JUST VALUE	1,943,384
NCON VALUE	0
INCOME VALUE	1,943,384
PREVIOUS YEAR MKT VALUE	1,085,369

PERMIT NUM	DESCRIPTION	AMT	ISSUED

SALES DATA

OFF RECORD Number	DATE	TYPE INST	Q / U	V / I	RSN CD	SALE PRICE
2072/1685	9/20/2016	QC	U	I	11	100
GRANTOR: OCEAN VIEW APARTMENTS						
GRANTEE: HALLMARK POST OAK L						
2072/1681	9/20/2016	SW	U	I	30	1,384,800
GRANTOR: OCEAN VIEW APARTMENTS						
GRANTEE: HALLMARK POST OAK L						

BUILDING NOTES

BUILDING DIMENSIONS

FOP=[YR=1993] W23S1BAS=[YR=1993] W8 FOP=[YR=1993]
N5W16S5E5FST=[YR=1993] S4E6 N4W6$E11$W5S4W6 N4W13S5W8
FOP=[YR=1993] N5W16S5E5FST=[YR=1993] S4E6
N4W6$E11$W5S4W6N4W13N5W8 FOP=[YR=1993] N5W16S5E5FST=[YR=1993]
S4E6 N4W6$E11$W5S4W6N4W13FOP=[YR=1993] N1 W23S4 FST=[YR=1993]
W2S3E6N3W4$E23N3 $ S3W19S3W6S26E12FOP=[YR=1993] E13N5
W13S5$N5E21FOP=[YR=1993] S5E16N5W16$ E24S5E8FOP=[YR=1993]
S5E16N5W16$E24 N5E8FOP=[YR=1993] S5E16N5W16$E24 FOP=[YR=1993]
S5E13N5W13$E13S5E12 N26FST=[YR=1993] N3W6S3E6$W6N3W19N3$
S3E23N4$ PTR=N20W25 FUS=[YR=1993]
N28W32S5W32N5W32S28E32S5E32N5 E32$E25S20$.

EXTRA FEATURES

LN	OB/XF CODE	DESCRIPTION	BLD	CAP	L	W	UNITS	UT	Adj R	ADJ UNIT PRICE	ORIG COND	YEAR ON	YEAR ACTUAL	Q	% COND	OB/XF MKT VALUE	NOTES

LAND DESCRIPTION

TOTAL OB/XF 0

LN	USE CODE	CLS	LAND USE DESCRIPTION	CAP	RD	LOC ZONE	FRONT	DEPTH	TOT LND UTS	UNIT TYPE	DT	DPTH FACT	% COND	TOT ADJ	UNIT PRICE	ADJ UNIT PRICE	LAND VALUE	OTHER ADJUSTMENTS AND NOTES	YEAR	DENSITY	DECL	FRZ	YR	CONSRV

REVIEW DATE 06/05/2024 BY KBA Total Acres: 0.00 Total Land Value: 369,243 Market: 0 Agricultural: 0 Common: 0 PRINTED 08/06/2024 BY SYS

LOTS 22 & 23 EX S-1
IN OR 2072/1681 & OR 2072/1685
INSIDE CITY LIMITS

HALLMARK POST OAK LLC/
3111 PACES MILL RD STE A250
ATLANTA, GA 30339

2024

00-00-31-1180-0022-0000

NASSAU COUNTY PROPERTY

BUILDING CHARACTERISTICS

ELEMENT	CD	CONSTRUCTION
Exterior Wall	05	AVERAGE 50
Exterior Wall	20	FACE BRICK 50
Roof Structur	03	GABLE/HIP 100
Roof Cover	03	COMP SHNGL 100
Interior Wall	05	DRYWALL 100
Interior Floo	14	CARPET 80
Interior Floo	08	SHT VINYL 20
Air Condition	03	CENTRAL 100
Heating Type	04	AIR DUCTED 100
Bedrooms		2 100
Bathrooms		1.5 100
Frame	02	WOOD FRAME 100
Story Height		0 100
RMS		0 100
Units		6 100
Quality	03	Quality Level 03
DOR CODE	0300	MULTI-FAMILY
MAP NUM		MKT AREA 01
NEIGHBORHOOD/LOC	1001.00	

AREA TYPE	TOTAL GROSS AREA	PCT OF BASE	TOT ADJ AREA	SUBAREA MARKET VALUE
BAS	2,940	100	2,940	218,304
FOP	65	30	20	1,485
FOP	65	30	20	1,485
FOP	80	30	24	1,782
FOP	80	30	24	1,782
FOP	80	30	24	1,782
FOP	80	30	24	1,782
FOP	88	30	26	1,930
FOP	92	30	28	2,079
FST	18	55	10	743
TOTALS	5,446		4,968	368,891

MARKET ADJUSTMENTS

TYPE	MDL	EFF. AREA	TOT ADJ PTS	EFF. BASE RATE	REPL. COST NEW	AYB	EYB	ECON	FNCT		NORM	% COND
0301	03	4,968	108.4260	92.16	457,851	1991	1991	0	0	0	19.43	80.57

5 APARTMENT – 0% - 0 Heated Area: 4732 HX Base Yr

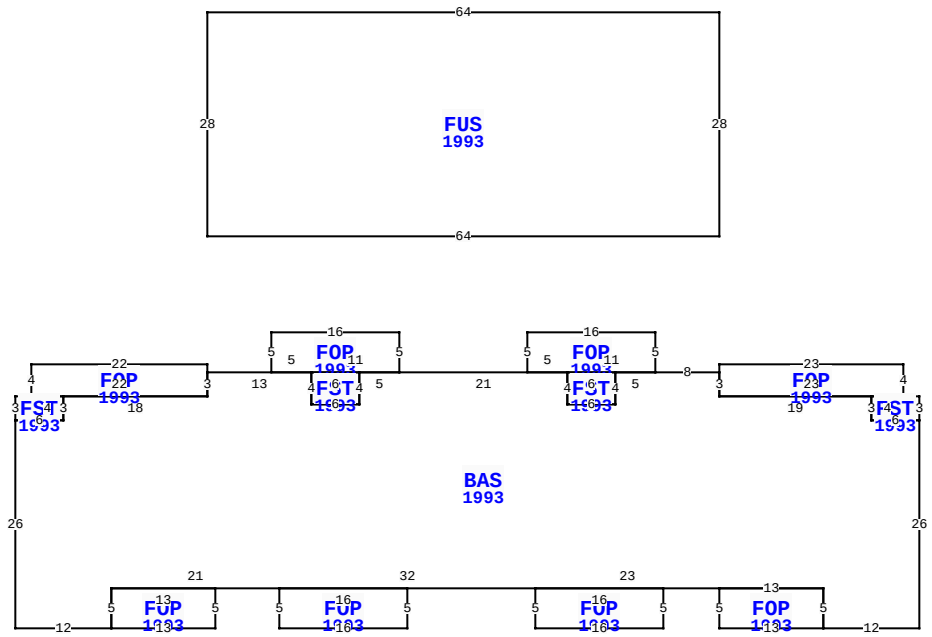

** This building has 14 Sub-Areas

996 CITRONA DR, FERNANDINA BEACH

BLD DATE	06/11/2018	KK	LGL DATE	
XF DATE	06/11/2018	KK	LAND DATE	06/11/2018 KK
INC DATE			AG DATE	

VALUATION SUMMARY

VALUATION BY	DIRECT_CAP
Tax Group: 2	Tax Dist:
BUILDING MARKET VALUE	1,574,141
TOTAL MARKET OB/XF VALUE	0
TOTAL LAND VALUE - MARKET	0
TOTAL MARKET VALUE	1,943,384
SOH/AGL Deduction	749,478
ASSESSED VALUE	1,193,906
TOTAL EXEMPTION VALUE	0
BASE TAXABLE VALUE	1,193,906
TOTAL JUST VALUE	1,943,384
NCON VALUE	0
INCOME VALUE	1,943,384
PREVIOUS YEAR MKT VALUE	1,085,369

PERMIT NUM	DESCRIPTION	AMT	ISSUED

SALES DATA

OFF RECORD Number	DATE	TYPE INST	Q / U	V / I	RSN CD	SALE PRICE
2072/1685	9/20/2016	QC	U	I	11	100
GRANTOR: OCEAN VIEW APARTMENTS						
GRANTEE: HALLMARK POST OAK L						
2072/1681	9/20/2016	SW	U	I	30	1,384,800
GRANTOR: OCEAN VIEW APARTMENTS						
GRANTEE: HALLMARK POST OAK L						

BUILDING NOTES

BUILDING DIMENSIONS

FST=[YR=1993] W2FOP=[YR=1993] N4W23S1 BAS=[YR=1993] W8 FOP=[YR=1993] N5W16S5E5 FST=[YR=1993] S4E6N4W6$E11$W5S4W6N4 W21FOP=[YR=1993] N5W16S5E5FST=[YR=1993] S4 E6N4W6$E11$W5S4W6N4W13FOP=[YR=1993] N1W22S4FST=[YR=1993] W2S3E6N3W4$E22 N3$ S3W18S3 W6 S26 E12 FOP=[YR=1993] E13 N5 W13 S5 $ N5E21 FOP=[YR=1993] S5E16N5W16 $ E32 FOP=[YR=1993] S5 E16 N5 W16 $ E23 FOP=[YR=1993] S5 E13 N5 W13 $ E13 S5 E12 N26 W6 N3 W19 N3 $ S3 E23 $ W4 S3 E6 N3 $ PTR= N20W25 FUS=[YR=1993] N28W64S28E64$E25S20 $.

EXTRA FEATURES

LN	OB/XF CODE	DESCRIPTION	BLD	CAP	L	W	UNITS	UT	Adj R	ADJ UNIT PRICE	ORIG COND	YEAR ON	YEAR ACTUAL	Q	% COND	OB/XF MKT VALUE	NOTES

LAND DESCRIPTION

TOTAL OB/XF 0

LN	USE CODE	CLS	LAND USE DESCRIPTION	CAP	RD	LOC ZONE	FRONT	DEPTH	TOT LND UTS	UNIT TYPE	DT	DPTH FACT	% COND	TOT ADJ	UNIT PRICE	ADJ UNIT PRICE	LAND VALUE	OTHER ADJUSTMENTS AND NOTES	YEAR	DENSITY	DECL	FRZ	YR	CONSRV

REVIEW DATE 06/05/2024 BY KBA Total Acres: 0.00 Total Land Value: 369,243 Market: 0 Agricultural: 0 Common: 0 PRINTED 08/06/2024 BY SYS

LOTS 22 & 23 EX S-1
IN OR 2072/1681 & OR 2072/1685
INSIDE CITY LIMITS

HALLMARK POST OAK LLC/
3111 PACES MILL RD STE A250
ATLANTA, GA 30339

2024

00-00-31-1180-0022-0000

BUILDING CHARACTERISTICS

ELEMENT	CD	CONSTRUCTION
Exterior Wall	05	AVERAGE 50
Exterior Wall	20	FACE BRICK 50
Roof Structur	03	GABLE/HIP 100
Roof Cover	03	COMP SHNGL 100
Interior Wall	05	DRYWALL 100
Interior Floo	14	CARPET 70
Interior Floo	08	SHT VINYL 30
Air Condition	03	CENTRAL 100
Heating Type	04	AIR DUCTED 100
Bedrooms		2 100
Bathrooms		1 100
Frame	02	WOOD FRAME 100
Story Height		0 100
RMS		0 100
Units		4 100
Quality	03	Quality Level 03
DOR CODE	0300	MULTI-FAMILY
MAP NUM		MKT AREA 01
NEIGHBORHOOD/LOC	1001.00	

AREA TYPE	TOTAL GROSS AREA	PCT OF BASE	TOT ADJ AREA	SUBAREA MARKET VALUE
AOF	450	100	450	33,070
BAS	3,226	100	3,226	237,072
FOP	50	30	15	1,102
FOP	56	30	17	1,250
FOP	75	30	22	1,617
FOP	75	30	22	1,617
FOP	75	30	22	1,617
FOP	75	30	22	1,617
FOP	156	30	47	3,454
FOP	156	30	47	3,454
TOTALS	4,604		4,004	294,246

MARKET ADJUSTMENTS

TYPE	MDL	EFF. AREA	TOT ADJ PTS	EFF. BASE RATE	REPL. COST NEW	AYB	EYB	ECON	FNCT		NORM	% COND
0301	03	4,004	107.3040	91.21	365,205	1991	1991	0	0	0	19.43	80.57

6 APARTMENT – 0% - 0 Heated Area: 3676 HX Base Yr

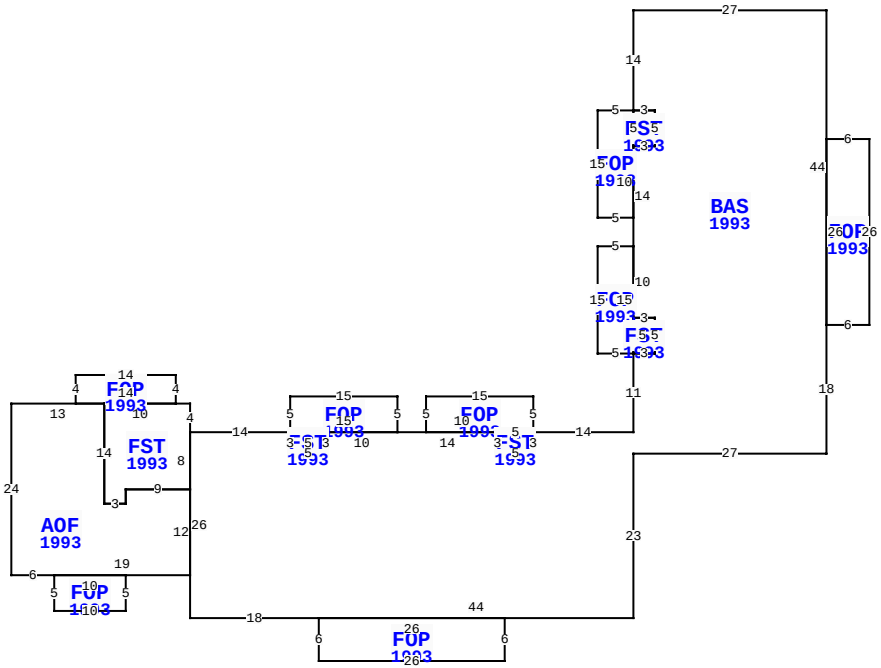

** This building has 15 Sub-Areas

996 CITRONA DR, FERNANDINA BEACH

BLD DATE	06/11/2018	KK	LGL DATE	
XF DATE	06/11/2018	KK	LAND DATE	06/11/2018 KK
INC DATE			AG DATE	

NASSAU COUNTY PROPERTY

PAGE 6 of 6 2

VALUATION SUMMARY

VALUATION BY	DIRECT_CAP
Tax Group: 2	Tax Dist:
BUILDING MARKET VALUE	1,574,141
TOTAL MARKET OB/XF VALUE	0
TOTAL LAND VALUE - MARKET	0
TOTAL MARKET VALUE	1,943,384
SOH/AGL Deduction	749,478
ASSESSED VALUE	1,193,906
TOTAL EXEMPTION VALUE	0
BASE TAXABLE VALUE	1,193,906
TOTAL JUST VALUE	1,943,384
NCON VALUE	0
INCOME VALUE	1,943,384
PREVIOUS YEAR MKT VALUE	1,085,369

PERMIT NUM	DESCRIPTION	AMT	ISSUED

SALES DATA

OFF RECORD Number	DATE	TYPE INST	Q / U	V / I	RSN CD	SALE PRICE
2072/1685	9/20/2016	QC	U	I	11	100
GRANTOR: OCEAN VIEW APARTMENTS						
GRANTEE: HALLMARK POST OAK L						
2072/1681	9/20/2016	SW	U	I	30	1,384,800
GRANTOR: OCEAN VIEW APARTMENTS						
GRANTEE: HALLMARK POST OAK L						

BUILDING NOTES

BUILDING DIMENSIONS

BAS=[YR=1993] W27 S14 FOP=[YR=1993] W5 S15 E5
N10FST=[YR=1993] E3N5W3S5$ N5$ E3 S5W3 S14 FOP=[YR=1993] W5
S15E5 FST=[YR=1993] E3N5W3S5$N15$ S10E3S5 W3 S11 W14
FOP=[YR=1993] N5 W15S5E10 FST=[YR=1993] S3E5 N3W5 $ E5$ S3 W5
N3 W14 FOP=[YR=1993] N5W15S5FST=[YR=1993] S3E5N3W5$ E15$W10
S3W5N3W14 FST=[YR=1993] N4W2FOP=[YR=1993] N4W14S4E14
$W10AOF=[YR=1993] W13S24E6FOP=[YR=1993] S5
E10N5W10$E19N12W9S2W3N14$S14E3 N2E9N8$S26E18FOP=[YR=1993]
S6E26N6 W26$E44N23E27N18FOP=[YR=1993] E6N26 W6S26$N44$.

EXTRA FEATURES

L N	OB/XF CODE	DESCRIPTION	BLD	CAP	L	W	UNITS	UT	Adj R	ADJ UNIT PRICE	ORIG COND	YEAR ON	YEAR ACTUAL	Q	% COND	OB/XF MKT VALUE	NOTES

LAND DESCRIPTION

TOTAL OB/XF 0

L N	USE CODE	CLS	LAND USE DESCRIPTION	CAP	R D	LOC ZONE	FRONT	DEPTH	TOT LND UTS	UNIT TYPE	D T	DPTH FACT	% COND	TOT ADJ	UNIT PRICE	ADJ UNIT PRICE	LAND VALUE	OTHER ADJUSTMENTS AND NOTES	YEAR	DENSITY	DECL	FRZ	YR	CONSRV

REVIEW DATE 06/05/2024 BY KBA Total Acres: 0.00 Total Land Value: 369,243 Market: 0 Agricultural: 0 Common: 0 PRINTED 08/06/2024 BY SYS