BLOCK 8 LOT 4
BUCKS FDNA BEACH # 2 PB 3/17

SIPES ZACHARY & COURTNEY
705 NE HALLER ST
COUPEVILLE, WA 98239

2024

00-00-31-114B-0008-0040

NASSAU COUNTY PROPERTY

BUILDING CHARACTERISTICS

ELEMENT	CD	CONSTRUCTION
Exterior Wall	10	ABOVE AVG 100
Roof Structur	08	IRREGULAR 100
Roof Cover	03	COMP SHNGL 100
Interior Wall	05	DRYWALL 100
Interior Floo	13	LVT/LAMNT 80
Interior Floo	14	CARPET 20
Air Condition	03	CENTRAL 100
Heating Type	04	AIR DUCTED 100
Bedrooms		3 100
Bathrooms		2 100
Frame	02	WOOD FRAME 100
Stories	2.	2. 100
Units		0 100
Occupancy	00	NONE 100
Quality	05	Quality Level 05
DOR CODE	0100	SINGLE FAMILY
MAP NUM		MKT AREA 01
NEIGHBORHOOD/LOC	1043.00	

AREA TYPE	TOTAL GROSS AREA	PCT OF BASE	TOT ADJ AREA	SUBAREA MARKET VALUE
BAS	1,089	100	1,089	187,690
DCK	247	10	25	4,309
FGR	625	55	344	59,289
FOP	90	30	27	4,654
FOP	168	30	50	8,618
FOP	168	30	50	8,618
FUS	912	100	912	157,184
STR	33	10	3	517
STR	120	10	12	2,068
TOTALS	3,452		2,512	432,945

MARKET ADJUSTMENTS

TYPE	MDL	EFF. AREA	TOT ADJ PTS	EFF. BASE RATE	REPL. COST NEW	AYB	EYB	ECON	FNCT		NORM	% COND
0500	01	2,512	117.8496	176.77	444,046	2017	2017	0	0	0	2.50	97.50

1 SFR CUST – 100% - 2021 Heated Area: 2001 HX Base Yr 2021

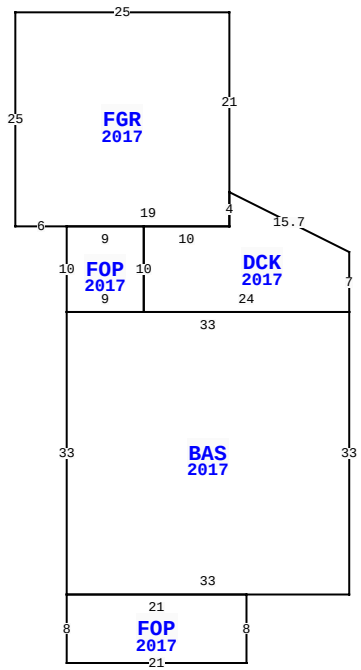

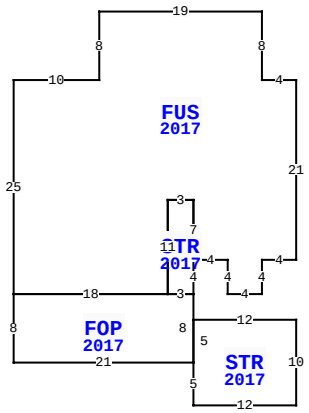

2663 1ST AV, FERNANDINA BEACH

BLD DATE		LGL DATE	
XF DATE		LAND DATE	03/13/2024 MLU
INC DATE		AG DATE	

VALUATION SUMMARY

VALUATION BY		STANDARD
Tax Group: 2	Tax Dist:	
BUILDING MARKET VALUE		432,945
TOTAL MARKET OB/XF VALUE		13,908
TOTAL LAND VALUE - MARKET		270,000
TOTAL MARKET VALUE		716,853
SOH/AGL Deduction		322,253
ASSESSED VALUE		394,600
TOTAL EXEMPTION VALUE	HX HB	50,000
BASE TAXABLE VALUE		344,600
TOTAL JUST VALUE		716,853
NCON VALUE		0
INCOME VALUE		
PREVIOUS YEAR MKT VALUE		667,402

PERMIT NUM	DESCRIPTION	AMT	ISSUED
20170847	NEW CONSTR	262,746	03/23/2017

SALES DATA

OFF RECORD Number	DATE	TYPE INST	Q U	V I	RSN CD	SALE PRICE
2330/0119	1/06/2020	WD	Q	I	01	550,000
GRANTOR: SCHETROMPF KIMBERLY						
GRANTEE: SIPES ZACHARY & COU						
2187/1034	3/29/2018	QC	U	I	11	100
GRANTOR: SAGE ROBERT						
GRANTEE: SCHETROMPF KIMBERLY						

BUILDING NOTES

BUILDING DIMENSIONS

DCK=[YR=2017] U7 L14 FGR=[YR=2017] N21 W25 S25 E6
FOP=[YR=2017] S10 BAS=[YR=2017] S33 FOP=[YR=2017] S8 E21 N8
W21$ E33 N33 W33$ E9 N10 W9$ E19 N4$ S4 W10 S10 E24 N7$
PTR=E15 FUS=[YR=2017] E10 N8 E19 S8 E4 S21 W4 S4 W4 N4 W4
STR=[YR=2017] N7 W3 S11 FOP=[YR=2017] W18 S8 E21
STR=[YR=2017] S5 E12 N10 W12 S5$ N8 W3$ E3 N4$ N7 W3 S11 W18
N25$ W15$.

EXTRA FEATURES

LN	OB/XF CODE	DESCRIPTION	BLD	CAP	L	W	UNITS	UT	Adj R	ADJ UNIT PRICE	ORIG COND	YEAR ON	YEAR ACTUAL	Q	% COND	OB/XF MKT VALUE	NOTES
1	0812	CONCRETE C	0	100	0	0	2,805.00	SF	4.00	4.00	100	2017	2017	3	97	10,883	
2	0476	VF 6 SBPL	0	100	0	0	84.00	LF	32.00	32.00	100	2017	2017	3	92	2,473	
3	0470	VNYL GATE	0	100	0	0	2.00	UT	300.00	300.00	100	2017	2017	3	92	552	

LAND DESCRIPTION

TOTAL OB/XF 13,908

LN	USE CODE	CLS	LAND USE DESCRIPTION	CAP	RD	LOC ZONE	FRONT	DEPTH	TOT LND UTS	UNIT TYPE	DT	DPTH FACT	% COND	TOT ADJ	UNIT PRICE	ADJ UNIT PRICE	LAND VALUE	OTHER ADJUSTMENTS AND NOTES	YEAR	DENSITY	DECL	FRZ	YR	CONSRV
1	000100	C	SFR	100		R-2	60.00	115.00	60.00	FF		1.00	1.00	1.00	4,500.00	4,500.00	270,000							

REVIEW DATE 03/21/2024 BY KBA Total Acres: 0.00 Total Land Value: 270,000 Market: 0 Agricultural: 0 Common: 270,000 PRINTED 08/06/2024 BY SYS