BLOCK 4 LOT 5
IN OR 1274/1011
BUCKS FDNA BEACH 2 PB 3/17

MONTGOMERY EDWIN F/MONTGOMERY JENNIFER B
96076 MARSH LAKES DRIVE
FERNANDINA BEACH, FL 32034

2024

00-00-31-114B-0004-0050

BUILDING CHARACTERISTICS

ELEMENT	CD	CONSTRUCTION
Exterior Wall	05	AVERAGE 50
Exterior Wall	16	WD FR STUC 50
Roof Structur	03	GABLE/HIP 100
Roof Cover	03	COMP SHNGL 100
Interior Wall	05	DRYWALL 100
Interior Floo	14	CARPET 80
Interior Floo	08	SHT VINYL 20
Air Condition	03	CENTRAL 100
Heating Type	04	AIR DUCTED 100
Bedrooms		4 100
Bathrooms		2 100
Frame	02	WOOD FRAME 100
Stories	2.	2. 100
Units		0 100
BUD8 Adjustme	02	DIST FB 100
Occupancy	00	NONE 100
Quality	03	Quality Level 03

DOR CODE	0800	MULTI-FAMILY	
MAP NUM		MKT AREA	01
NEIGHBORHOOD/LOC	1043.00		

AREA TYPE	TOTAL GROSS AREA	PCT OF BASE	TOT ADJ AREA	SUBAREA MARKET VALUE
BAL	418	15	63	6,728
BAS	876	100	876	93,557
FOP	45	30	14	1,495
FUS	876	100	876	93,557
PTO	128	5	6	641
STR	52	10	5	534
TOTALS	2,395		1,840	196,514

MARKET ADJUSTMENTS

TYPE	MDL	EFF. AREA	TOT ADJ PTS	EFF. BASE RATE	REPL. COST NEW	AYB	EYB	ECON	FNCT		NORM	% COND
2700	01	1,840	108.5000	135.62	249,541	1976	1976	0	0	0	21.25	78.75

1 DUPLEX – 0% - 0 Heated Area: 1752 HX Base Yr

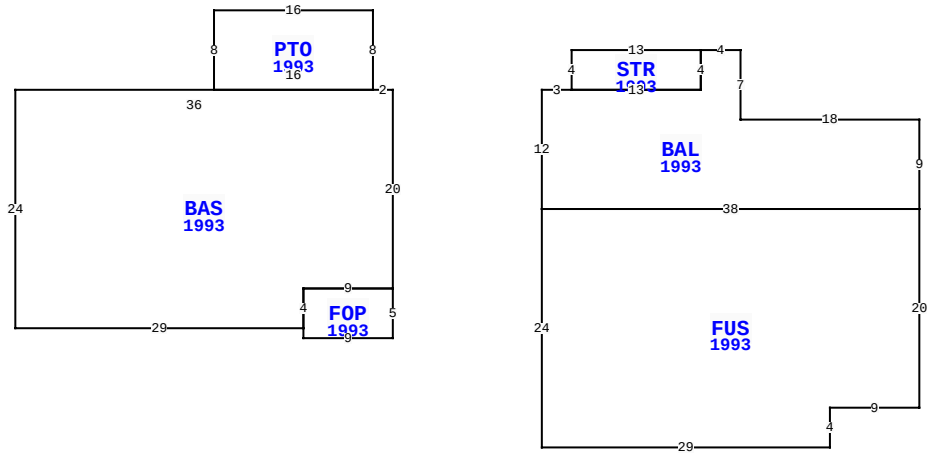

2530 1ST AVE, FERNANDINA BEACH

BLD DATE		LGL DATE	
XF DATE		LAND DATE	03/13/2024 MLU
INC DATE		AG DATE	

NASSAU COUNTY PROPERTY

PAGE 1 of 1 2

VALUATION SUMMARY

VALUATION BY	STANDARD
Tax Group: 2	Tax Dist:
BUILDING MARKET VALUE	196,514
TOTAL MARKET OB/XF VALUE	1,112
TOTAL LAND VALUE - MARKET	225,000
TOTAL MARKET VALUE	422,626
SOH/AGL Deduction	109,757
ASSESSED VALUE	312,869
TOTAL EXEMPTION VALUE	0
BASE TAXABLE VALUE	312,869
TOTAL JUST VALUE	422,626
NCON VALUE	0
INCOME VALUE	
PREVIOUS YEAR MKT VALUE	389,494

PERMIT NUM	DESCRIPTION	AMT	ISSUED
20112119	WINDOWS	2,500	11/22/2011
B021352	REMODEL	8,000	08/07/2002
5540	ADDITION	2,000	08/14/1989

SALES DATA

OFF RECORD Number	DATE	TYPE INST	Q U /	V I /	RSN CD	SALE PRICE
1274/1011	11/17/2004	WD	Q	I		315,000
GRANTOR: DUKE CHARLES W & REBE						
GRANTEE: MONTGOMERY EDWIN F						
0542/1006	5/09/1988	WD	Q	I		87,200
GRANTOR: STANLEY NEWMAN & C						
GRANTEE: DUKE C W & FORD R A						

BUILDING NOTES

BUILDING DIMENSIONS

BAS=[YR=1993] W2 PTO=[YR=1993] N8 W16 S8 E16$ W36 S24 E29
FOP=[YR=1993] S1 E9 N5 W9 S4$ N4 E9 N20$ PTR= E15
BAL=[YR=1993] E3 STR=[YR=1993] N4 E13 S4 W13$ E13 N4 E4 S7
E18 S9 FUS=[YR=1993] S20 W9 S4 W29 N24 E38$ W38 N12$ W15$.

EXTRA FEATURES

LN	OB/XF CODE	DESCRIPTION	BLD	CAP	L	W	UNITS	UT	Adj R	ADJ UNIT PRICE	ORIG COND	YEAR ON	YEAR ACTUAL	Q	% COND	OB/XF MKT VALUE	NOTES
1	0820	WOOD WALK	0	0	36	3	108.00	SF	11.75	11.75	100	1985	1985	3	40	508	
2	1243	WD DECK F	0	0	0	0	194.00	SF	8.00	8.00	100	1985	1985	3	20	310	
3	0940	SHEDS/PORT	0	0	7	7	49.00	SF	30.00	30.00	100	2002	2002	3	20	294	

LAND DESCRIPTION

TOTAL OB/XF 1,112

LN	USE CODE	CLS	LAND USE DESCRIPTION	CAP	RD	LOC ZONE	FRONT	DEPTH	TOT LND UTS	UNIT TYPE	DT	DPTH FACT	% COND	TOT ADJ	UNIT PRICE	ADJ UNIT PRICE	LAND VALUE	OTHER ADJUSTMENTS AND NOTES	YEAR	DENSITY	DECL	FRZ	YR	CONSRV
1	000800	C	MULTI-FAM	0		R-2	50.00	115.00	50.00	FF		1.00	1.00	1.00	4,500.00	4,500.00	225,000							

REVIEW DATE 06/06/2024 BY KBA Total Acres: 0.00 Total Land Value: 225,000 Market: 0 Agricultural: 0 Common: 225,000 PRINTED 08/06/2024 BY SYS