BLOCK 3 N1/2 OF LOT 3
IN OR 1505/1306
BUCKS FDNA #2 PB 3/17

ROWE RICKEY JAMES & MARSHA K
PO BOX 288
QUITMAN, GA 31643

2024

00-00-31-114B-0003-0031

NASSAU COUNTY PROPERTY

BUILDING CHARACTERISTICS

ELEMENT	CD	CONSTRUCTION
Exterior Wall	05	AVERAGE 90
Exterior Wall	16	WD FR STUC 10
Roof Structur	03	GABLE/HIP 100
Roof Cover	03	COMP SHNGL 100
Interior Wall	05	DRYWALL 100
Interior Floo	14	CARPET 80
Interior Floo	08	SHT VINYL 20
Air Condition	03	CENTRAL 100
Heating Type	04	AIR DUCTED 100
Bedrooms		3 100
Bathrooms		2 100
Frame	02	WOOD FRAME 100
Stories	2.	2. 100
Units		0 100
Quality	03	Quality Level 03
DOR CODE	0100	SINGLE FAMILY
MAP NUM		MKT AREA 01
NEIGHBORHOOD/LOC	1043.00	

AREA TYPE	TOTAL GROSS AREA	PCT OF BASE	TOT ADJ AREA	SUBAREA MARKET VALUE
BAS	732	100	732	108,759
FGR	432	55	238	35,361
FOP	56	30	17	2,526
FSP	80	40	32	4,755
FUS	690	100	690	102,519
UOP	80	20	16	2,377
TOTALS	2,070		1,725	256,296

MARKET ADJUSTMENTS

TYPE	MDL	EFF. AREA	TOT ADJ PTS	EFF. BASE RATE	REPL. COST NEW	AYB	EYB	ECON	FNCT		NORM	% COND
0320	12	1,725	184.1100	174.90	301,702	1992	1992	0	0	0	15.05	84.95

1 TOWNHOUSE - 0% - 0 Heated Area: 1422 HX Base Yr

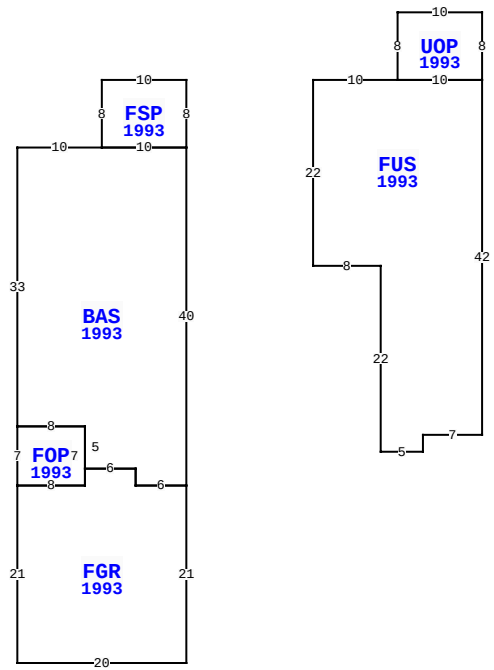

BLD DATE	
XF DATE	
INC DATE	
LGL DATE	
LAND DATE	03/13/2024 MLU
AG DATE	

2676 1ST AV A, FERNANDINA BEACH

VALUATION SUMMARY

VALUATION BY	STANDARD
Tax Group: 2	Tax Dist:
BUILDING MARKET VALUE	256,296
TOTAL MARKET OB/XF VALUE	2,751
TOTAL LAND VALUE - MARKET	168,750
TOTAL MARKET VALUE	427,797
SOH/AGL Deduction	127,891
ASSESSED VALUE	299,906
TOTAL EXEMPTION VALUE	0
BASE TAXABLE VALUE	299,906
TOTAL JUST VALUE	427,797
NCON VALUE	0
INCOME VALUE	
PREVIOUS YEAR MKT VALUE	409,946

PERMIT NUM	DESCRIPTION	AMT	ISSUED

SALES DATA

OFF RECORD Number	DATE	TYPE INST	Q / U	V / I	RSN CD	SALE PRICE
1505/1306	6/14/2007	WD	Q	I		255,000
GRANTOR: EVANS ROGER L & PAULI						
GRANTEE: ROWE RICKY JAMES &						
1109/1524	1/27/2003	WD	U	I	07	100
GRANTOR: INMAN W H JR & LINDA						
GRANTEE: EVANS ROGER L & PAU						

BUILDING NOTES

BUILDING DIMENSIONS

FSP=[YR=1993] W10 S8 BAS=[YR=1993] W10 S33 FOP=[YR=1993] S7 FGR=[YR=1993] S21 E20 N21 W6 N2 W6 S2 W8 $ E8 N7 W8 $ E8 S5 E6 S2 E6 N40 W10 $ E10 N8 $ PTR= E15 FUS=[YR=1993] E10 UOP=[YR=1993] N8 E10 S8 W10 $ E10 S42 W7 S2 W5 N22 W8 N22 $ W15 $.

EXTRA FEATURES

LN	OB/XF CODE	DESCRIPTION	BLD	CAP	L	W	UNITS	UT	Adj R	ADJ UNIT PRICE	ORIG COND	YEAR ON	YEAR ACTUAL	Q	% COND	OB/XF MKT VALUE	NOTES
1	0811	CONCRETE B	0	0	0	0	709.00	SF	5.20	5.20	100	1992	1992	3	64	2,360	
2	0810	CONCRETE A	0	0	0	0	94.00	SF	6.50	6.50	100	1992	1992	3	64	391	

LAND DESCRIPTION

TOTAL OB/XF 2,751

LN	USE CODE	CLS	LAND USE DESCRIPTION	CAP	RD	LOC ZONE	FRONT	DEPTH	TOT LND UTS	UNIT TYPE	DT	DPTH FACT	% COND	TOT ADJ	UNIT PRICE	ADJ UNIT PRICE	LAND VALUE	OTHER ADJUSTMENTS AND NOTES	YEAR	DENSITY	DECL	FRZ	YR	CONSRV
1	000100	C	SFR	0		R-2	25.00	115.00	25.00	FF		1.00	1.00	1.50	4,500.00	6,750.00	168,750							

REVIEW DATE 05/12/2019 BY KBA Total Acres: 0.00 Total Land Value: 168,750 Market: 0 Agricultural: 0 Common: 168,750 PRINTED 08/06/2024 BY SYS