LOT 77
IN OR 2257/1599
BUCKS FDNA BEACH 1 PB 2/30

KILLEN K ALAN
PO BOX 1509
FERNANDINA BEACH, FL 32035

2024

00-00-31-114A-0077-0000

NASSAU COUNTY PROPERTY

BUILDING CHARACTERISTICS

ELEMENT	CD	CONSTRUCTION
Exterior Wall	05	AVERAGE 50
Exterior Wall	17	CB STUCCO 50
Roof Structur	03	GABLE/HIP 100
Roof Cover	03	COMP SHNGL 100
Interior Wall	05	DRYWALL 100
Interior Floo	14	CARPET 70
Interior Floo	11	CLAY TILE 30
Air Condition	03	CENTRAL 100
Heating Type	04	AIR DUCTED 100
Bedrooms		5 100
Bathrooms		4 100
Frame	02	WOOD FRAME 100
Stories	2.	2. 100
Units		0 100
BUD8 Adjustme	02	DIST FB 100
Occupancy	00	NONE 100
Quality	04	Quality Level 04
DOR CODE	0800	MULTI-FAMILY
MAP NUM		MKT AREA 01
NEIGHBORHOOD/LOC	1058.00	

AREA TYPE	TOTAL GROSS AREA	PCT OF BASE	TOT ADJ AREA	SUBAREA MARKET VALUE
APT	816	100	816	105,664
BAL	480	15	72	9,323
BAS	816	100	816	105,664
BAS	90	100	90	11,654
DCK	140	10	14	1,813
DCK	96	10	10	1,295
FOP	192	30	58	7,511
FST	90	55	50	6,475
PTO	16	5	1	129
UOP	64	20	13	1,684
TOTALS	2,800		1,940	251,210

MARKET ADJUSTMENTS

TYPE	MDL	EFF. AREA	TOT ADJ PTS	EFF. BASE RATE	REPL. COST NEW	AYB	EYB	ECON	FNCT		NORM	% COND
2700	01	1,940	120.2901	150.36	291,698	1970	1995	0	0	0	13.88	86.12

1 DUPLEX – 100% - 2019 Heated Area: 1722 HX Base Yr 2019

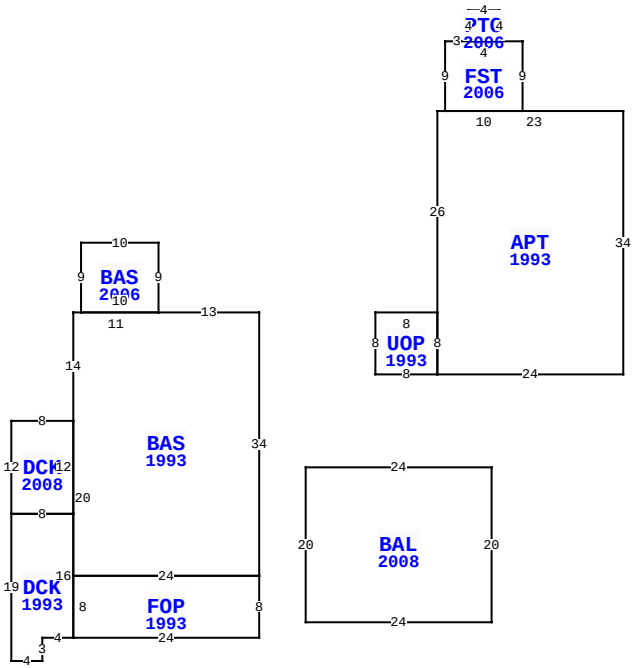

2681 S FLETCHER AVE, FERNANDINA BEACH

BLD DATE		LGL DATE	
XF DATE		LAND DATE	03/20/2024 MLU
INC DATE		AG DATE	

VALUATION SUMMARY

VALUATION BY		STANDARD
Tax Group: 2	Tax Dist:	
BUILDING MARKET VALUE		251,210
TOTAL MARKET OB/XF VALUE		5,273
TOTAL LAND VALUE - MARKET		350,000
TOTAL MARKET VALUE		606,483
SOH/AGL Deduction		240,746
ASSESSED VALUE		365,737
TOTAL EXEMPTION VALUE	HX HB	50,000
BASE TAXABLE VALUE		315,737
TOTAL JUST VALUE		606,483
NCON VALUE		0
INCOME VALUE		
PREVIOUS YEAR MKT VALUE		541,022

PERMIT NUM	DESCRIPTION	AMT	ISSUED
20101969	OTHER	1,850	11/15/2010
20080712	XFOB	3,200	04/29/2008
20080686	REPAIR/RRF	3,740	04/25/2008
20053200	H/AC	1,000	12/16/2005
20053158	REMODEL	1,000	12/12/2005
20053125	OTHER	1,000	12/08/2005

SALES DATA

OFF RECORD Number	DATE	TYPE INST	Q / U	V / I	RSN CD	SALE PRICE
2257/1599	2/27/2019	SW	U	I	11	100
GRANTOR: KILLEN SHANNON E						
GRANTEE: KILLEN K ALAN						
0914/1614	1/10/2000	WD	Q	I		170,000
GRANTOR: BARRY LAND LLC						
GRANTEE: KILLEN K ALAN & SHA						

BUILDING NOTES

BUILDING DIMENSIONS

BAS=[YR=1993;ORIG=0,0] W13 W11 S14 S20 E24 N34 $
APT=[YR=1993;ORIG=23,0] N26 E1 E23 S34 W24 N8 $
BAL=[YR=2008;ORIG=30,20] S20 W24 N20 E24 $
FOP=[YR=1993;ORIG=-24,42] E24 N8 W24 S8 $
DCK=[YR=1993;ORIG=-32,26] S19 E4 N3 E4 N16 W8 $
DCK=[YR=2008;ORIG=-24,14] W8 S12 E8 N12 $
BAS=[YR=2006;ORIG=-13,0] N9 W10 S9 E10 $
FST=[YR=2006;ORIG=24,-26] N9 E3 E7 S9 W10 $
UOP=[YR=1993;ORIG=15,0] E8 S8 W8 N8 $
PTO=[YR=2006;ORIG=27,-35] N4 E4 S4 W4 $
PTR=[ORIG=0,0] E15 W15 $
PTR=[ORIG=0,0] E30 S20 N20 W30 $

EXTRA FEATURES

L N	OB/XF CODE	DESCRIPTION	BLD	CAP	L	W	UNITS	UT	Adj R	ADJ UNIT PRICE	ORIG COND	YEAR ON	YEAR ACTUAL	Q	% COND	OB/XF MKT VALUE	NOTES
1	0812	CONCRETE C	0	100	0	0	1,557.00	SF	4.00	4.00	100	2001	2001	3	80	4,982	
2	0810	CONCRETE A	0	100	14	4	56.00	SF	6.50	6.50	100	2001	2001	3	80	291	

TOTAL OB/XF 5,273

LAND DESCRIPTION

L N	USE CODE	CLS	LAND USE DESCRIPTION	CAP	R D	LOC ZONE	FRONT	DEPTH	TOT LND UTS	UNIT TYPE	D T	DPTH FACT	% COND	TOT ADJ	UNIT PRICE	ADJ UNIT PRICE	LAND VALUE	OTHER ADJUSTMENTS AND NOTES	YEAR	DENSITY	DECL	FRZ	YR	CONSRV
1	000800	C	MULTI-FAM	100		R-2	50.00	110.00	50.00	FF		1.00	1.00	1.00	7,000.00	7,000.00	350,000							

REVIEW DATE 06/06/2024 BY KBA Total Acres: 0.00 Total Land Value: 350,000 Market: 0 Agricultural: 0 Common: 350,000 PRINTED 08/06/2024 BY SYS