LOT 57
IN OR 1442/326
BUCKS FDNA BEACH 1 PB 2/30

JORDAN FLORIDA RENTALS LLC
10689 BIG CANOE
JASPER, GA 30143

2024

00-00-31-114A-0057-0000

NASSAU COUNTY PROPERTY

BUILDING CHARACTERISTICS

ELEMENT	CD	CONSTRUCTION
Exterior Wall	07	ASB SHNGLE 50
Exterior Wall	15	CONC BLOCK 50
Roof Structur	03	GABLE/HIP 100
Roof Cover	03	COMP SHNGL 100
Interior Wall	05	DRYWALL 90
Interior Wall	04	PLYWOOD 10
Interior Floo	09	PINE WOOD 80
Interior Floo	08	SHT VINYL 20
Air Condition	03	CENTRAL 100
Heating Type	04	AIR DUCTED 100
Bedrooms		4 100
Bathrooms		2 100
Frame	03	MASONRY 100
Stories	2.	2. 100
Units		0 100
BUD8 Adjustme	02	DIST FB 100
Occupancy	00	NONE 100
Quality	04	Quality Level 04
DOR CODE	0800	MULTI-FAMILY
MAP NUM		MKT AREA 01
NEIGHBORHOOD/LOC	1052.00	

AREA TYPE	TOTAL GROSS AREA	PCT OF BASE	TOT ADJ AREA	SUBAREA MARKET VALUE
APT	720	100	720	78,815
APT	720	100	720	78,815
DCK	78	10	8	876
DCK	117	10	12	1,313
DCK	80	10	8	876
PTO	91	5	5	547
STR	56	10	6	657
UOP	78	20	16	1,752
UOP	117	20	23	2,518
TOTALS	2,057		1,518	166,168

MARKET ADJUSTMENTS

TYPE	MDL	EFF. AREA	TOT ADJ PTS	EFF. BASE RATE	REPL. COST NEW	AYB	EYB	ECON	FNCT		NORM	% COND
2700	01	1,518	102.2805	127.85	194,076	1950	2000	0	0	0	14.38	85.62

1 DUPLEX – 0% - 0 Heated Area: 1440 HX Base Yr

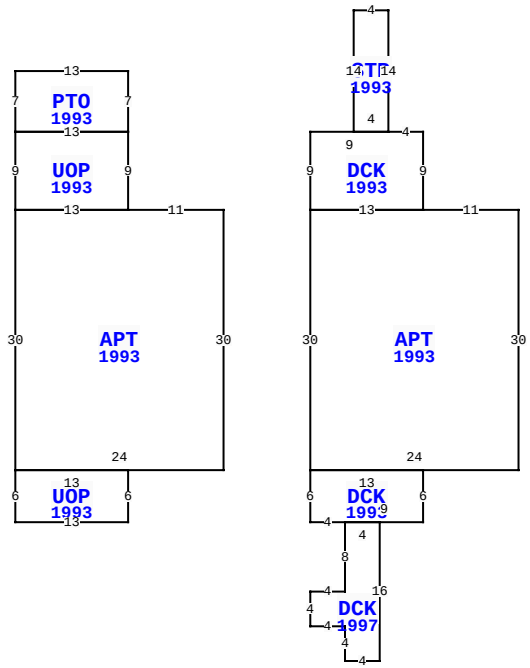

2666 S FLETCHER AVE, FERNANDINA BEACH

BLD DATE		LGL DATE	
XF DATE		LAND DATE	05/07/2024 MLU
INC DATE		AG DATE	

VALUATION SUMMARY

VALUATION BY	STANDARD
Tax Group: 2	Tax Dist:
BUILDING MARKET VALUE	166,168
TOTAL MARKET OB/XF VALUE	4,500
TOTAL LAND VALUE - MARKET	825,000
TOTAL MARKET VALUE	995,668
SOH/AGL Deduction	41,541
ASSESSED VALUE	954,127
TOTAL EXEMPTION VALUE	0
BASE TAXABLE VALUE	954,127
TOTAL JUST VALUE	995,668
NCON VALUE	4,500
INCOME VALUE	
PREVIOUS YEAR MKT VALUE	882,689

PERMIT NUM	DESCRIPTION	AMT	ISSUED
B969922	REPAIR/RRF	2,310	07/16/1996
B9088	REPAIR/RRF	2,503	05/19/1995

SALES DATA

OFF RECORD Number	DATE	TYPE INST	Q / U	V / I	RSN CD	SALE PRICE
1442/0326	9/05/2006	WD	U	I	19	618,900
GRANTOR: JORDAN EVELYN ANN						
GRANTEE: JORDAN FLORIDA RENT						
0223/0006	8/01/1976	WD	U	I		21,900
GRANTOR:						
GRANTEE:						

BUILDING NOTES

BUILDING DIMENSIONS

```
APT=[YR=1993;ORIG=0,0] W11 W13 S30 E24 N30 $
APT=[YR=1993;ORIG=10,0] S30 E24 N30 W11 W13 $
UOP=[YR=1993;ORIG=-11,0] N9 W13 S9 E13 $
DCK=[YR=1993;ORIG=23,0] N9 W4 W9 S9 E13 $
PTO=[YR=1993;ORIG=-11,-9] N7 W13 S7 E13 $
DCK=[YR=1997;ORIG=14,36] S8 W4 S4 E4 S4 E4 N16 W4 $
UOP=[YR=1993;ORIG=-24,30] S6 E13 N6 W13 $
DCK=[YR=1993;ORIG=10,30] S6 E4 E9 N6 W13 $
STR=[YR=1993;ORIG=19,-9] N14 W4 S14 E4 $
PTR=[ORIG=0,0] E10 W10 $
.
```

EXTRA FEATURES

LN	OB/XF CODE	DESCRIPTION	BLD	CAP	L	W	UNITS	UT	Adj R	ADJ UNIT PRICE	ORIG COND	YEAR ON	YEAR ACTUAL	Q	% COND	OB/XF MKT VALUE	NOTES
1	0855	CONC PAVER	0	0	0	0	450.00	SF	10.00	10.00	100	2024	2023		100	4,500	

LAND DESCRIPTION

TOTAL OB/XF 4,500

LN	USE CODE	CLS	LAND USE DESCRIPTION	CAP	RD	LOC ZONE	FRONT	DEPTH	TOT LND UTS	UNIT TYPE	DT	DPTH FACT	% COND	TOT ADJ	UNIT PRICE	ADJ UNIT PRICE	LAND VALUE	OTHER ADJUSTMENTS AND NOTES	YEAR	DENSITY	DECL	FRZ	YR	CONSRV
1	000120	C	SFR OCN FT	0		R-2	50.00	290.00	50.00	FF		1.00	1.00	1.00	16,500.00	16,500.00	825,000							

REVIEW DATE 06/06/2024 BY KBA Total Acres: 0.00 Total Land Value: 825,000 Market: 0 Agricultural: 0 Common: 825,000 PRINTED 08/06/2024 BY SYS