LOT 36
IN OR 1875/49
BUCKS FDNA BEACH 1 PB 2/30

LAHOOD CHARLES J & ELAINE C
2473 S FLETCHER AVE
FERNANDINA BEACH, FL 32034

2024

00-00-31-114A-0036-0000

BUILDING CHARACTERISTICS

ELEMENT	CD	CONSTRUCTION
Exterior Wall	10	ABOVE AVG 50
Exterior Wall	17	CB STUCCO 50
Roof Structur	03	GABLE/HIP 100
Roof Cover	12	MODULAR MT 100
Interior Wall	05	DRYWALL 100
Interior Floo	11	CLAY TILE 50
Interior Floo	14	CARPET 50
Air Condition	03	CENTRAL 100
Heating Type	04	AIR DUCTED 100
Bedrooms		3 100
Bathrooms		3.5 100
Frame	02	WOOD FRAME 100
Stories	2.	2. 100
Units		0 100
BUD8 Adjustme	02	DIST FB 100
Occupancy	00	NONE 100
Quality	06	Quality Level 06
DOR CODE	0100	SINGLE FAMILY
MAP NUM		MKT AREA 01
NEIGHBORHOOD/LOC	1058.00	

AREA TYPE	TOTAL GROSS AREA	PCT OF BASE	TOT ADJ AREA	SUBAREA MARKET VALUE
BAS	1,150	100	1,150	200,787
FGR	616	55	339	59,188
FOP	70	30	21	3,666
FOP	237	30	71	12,396
FUS	920	100	920	160,630
FUS	360	100	360	62,855
PTO	12	5	1	174
PTO	12	5	1	174
PTO	24	5	1	174
UOP	40	20	8	1,397
TOTALS	3,995		2,983	520,825

MARKET ADJUSTMENTS

TYPE	MDL	EFF. AREA	TOT ADJ PTS	EFF. BASE RATE	REPL. COST NEW	AYB	EYB	ECON	FNCT		NORM	% COND
0500	01	2,983	127.5580	191.34	570,767	1960	2005	0	0	0	8.75	91.25

1 SFR CUST - 100% - 2014 Heated Area: 2430 HX Base Yr 2014

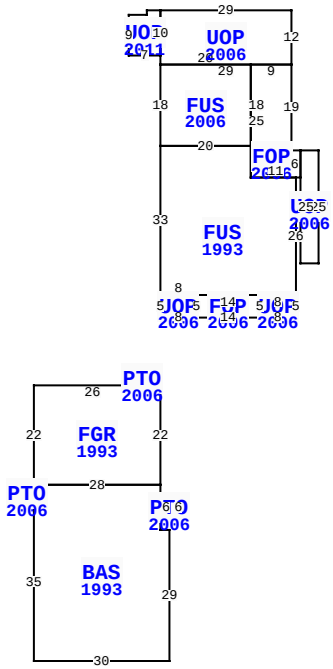

** This building has 14 Sub-Areas

BLD DATE	05/14/2007	KK	LGL DATE	
XF DATE			LAND DATE	03/20/2024 MLU
INC DATE			AG DATE	

2473 S FLETCHER AVE, FERNANDINA BEACH

NASSAU COUNTY PROPERTY

PAGE 1 of 1 2

VALUATION SUMMARY

VALUATION BY		STANDARD
Tax Group: 2	Tax Dist:	
BUILDING MARKET VALUE		520,825
TOTAL MARKET OB/XF VALUE		31,663
TOTAL LAND VALUE - MARKET		525,000
TOTAL MARKET VALUE		1,077,488
SOH/AGL Deduction		465,482
ASSESSED VALUE		612,006
TOTAL EXEMPTION VALUE	HX HB	50,000
BASE TAXABLE VALUE		562,006
TOTAL JUST VALUE		1,077,488
NCON VALUE		0
INCOME VALUE		
PREVIOUS YEAR MKT VALUE		1,018,038

PERMIT NUM	DESCRIPTION	AMT	ISSUED
20120867	BATH REM	100	05/15/2012
20120868	BATH REM	100	05/15/2012
20120745	BATH REMODEL	2,280	04/27/2012
20110536	XFOB	7,902	04/12/2011
20110307	SWIM POOL	20,000	03/04/2011
20110308	SWIM POOL	900	03/04/2011

SALES DATA

OFF RECORD Number	DATE	TYPE INST	Q / U	V / I	RSN CD	SALE PRICE
1875/0049	8/23/2013	WD	Q	I	02	640,000
GRANTOR: WILLIAMS SHAWN & MAGG						
GRANTEE: LAHOOD CHARLES J &						
1695/0555	8/20/2010	WD	Q	I	01	608,000
GRANTOR: TEAFORD JOAN						
GRANTEE: JEFFRIES MAGGIE A &						

BUILDING NOTES

BUILDING DIMENSIONS

FGR=[YR=1993] W2 PTO=[YR=2006] N3 W4 S3 E4$ W26 S22
PTO=[YR=2006] W3 S4 E3 BAS=[YR=1993] S35 E30 N29 W2 N2
PTO=[YR=2006] E4 N6 W4 S6$ N8 W28 S4 $ N4$ E28 N22$ PTR=N15
UOP=[YR=2006] N5 FUS=[YR=1993] N33 FUS=[YR=2006] N18
UOP=[YR=2006] N2 UOP=[YR=2011] N10W3S1W4S9E7$ N10 E29 S12
FOP=[YR=2006] S19 E2 UOP=[YR=2006] E4 S25 W4 N25$ S6 W11 N25
E9$ W29 $ E20 S18 W20$ E20 S7 E10 S26 UOP=[YR=2006] S5 W8
FOP=[YR=2006] W14 N5 E14 S5 $ N5 E8 $ W30 $ E8 S5 W8 $ S15
$.

EXTRA FEATURES

L N	OB/XF CODE	DESCRIPTION	BLD	CAP	L	W	UNITS	UT	Adj R	ADJ UNIT PRICE	ORIG COND	YEAR ON	YEAR ACTUAL	Q	% COND	OB/XF MKT VALUE	NOTES
1	0811	CONCRETE B	0	100	0	0	921.00	SF	5.20	5.20	100	1960	1960	3	20	958	
2	0810	CONCRETE A	0	100	0	0	142.00	SF	6.50	6.50	100	2006	2006	3	87	803	
3	0861	POOL GUNIT	0	100	0	0	336.00	SF	85.00	85.00	100	2011	2011	3	64	18,278	
4	0877	JACUZZI	0	100	0	0	1.00	UT	1,000.00	1,000.00	100	2011	2011	3	50	500	
5	0835	QUARY TILE	0	100	0	0	701.00	SF	10.00	10.00	100	2011	2011	3	92	6,449	
6	0476	VF 6 SBPL	0	100	0	0	126.00	LF	32.00	32.00	100	2011	2011	3	81	3,266	
7	0479	VF PICKET	0	100	0	0	114.00	LF	10.00	10.00	100	2011	2011	3	81	923	
8	0470	VNYL GATE	0	100	0	0	2.00	UT	300.00	300.00	100	2011	2011	3	81	486	

LAND DESCRIPTION

TOTAL OB/XF 31,663

L N	USE CODE	CLS	LAND USE DESCRIPTION	CAP	R D	LOC ZONE	FRONT	DEPTH	TOT LND UTS	UNIT TYPE	D T	DPTH FACT	% COND	TOT ADJ	UNIT PRICE	ADJ UNIT PRICE	LAND VALUE	OTHER ADJUSTMENTS AND NOTES	YEAR	DENSITY	DECL	FRZ	YR	CONSRV
1	000100	C	SFR	100		R-2	50.00	110.00	50.00	FF		1.00	1.00	1.50	7,000.00	10,500.00	525,000							

REVIEW DATE 01/06/2023 BY TWA Total Acres: 0.00 Total Land Value: 525,000 Market: 0 Agricultural: 0 Common: 525,000 PRINTED 08/06/2024 BY SYS