BLOCK J W3/4 OF SUB C OF LOT
11 & PT OF ABDN ALLEY
IN OR 1310/82

DOUGHERTY ROBERT C & KATHLEEN C
PO BOX 16654
FERNANDINA BEACH, FL 32035-3128

2024

00-00-31-1120-000J-0115

BUILDING CHARACTERISTICS

ELEMENT	CD	CONSTRUCTION
Exterior Wall	10	ABOVE AVG 100
Roof Structur	03	GABLE/HIP 100
Roof Cover	03	COMP SHNGL 100
Interior Wall	05	DRYWALL 100
Interior Floo	12	HARDWOOD 90
Interior Floo	11	CLAY TILE 10
Air Condition	03	CENTRAL 100
Heating Type	04	AIR DUCTED 100
Bedrooms		3 100
Bathrooms		2 100
Frame	02	WOOD FRAME 100
Stories	1.	1. 100
Units		0 100
BUD8 Adjustme	02	DIST FB 100
Occupancy	00	NONE 100
Quality	05	Quality Level 05
DOR CODE	0100	SINGLE FAMILY
MAP NUM		MKT AREA 01
NEIGHBORHOOD/LOC	1008.00	

AREA TYPE	TOTAL GROSS AREA	PCT OF BASE	TOT ADJ AREA	SUBAREA MARKET VALUE
BAS	779	100	779	83,802
BAS	931	100	931	100,154
FOP	48	30	14	1,506
FOP	491	30	147	15,814
STR	20	10	2	215
STR	28	10	3	323
STR	48	10	5	538
TOTALS	2,345		1,881	202,351

MARKET ADJUSTMENTS

TYPE	MDL	EFF. AREA	TOT ADJ PTS	EFF. BASE RATE	REPL. COST NEW	AYB	EYB	ECON	FNCT		NORM	% COND
0100	01	1,881	123.7544	117.57	221,149	1948	2005	0	0	0	8.50	91.50

1 SINGLE FAM – 100% - 2019 Heated Area: 1710 HX Base Yr 2019

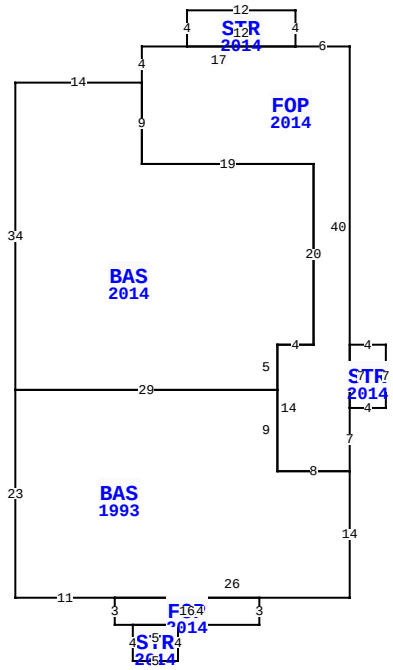

2211 FLORIDA AVE, FERNANDINA BEACH

BLD DATE		LGL DATE	
XF DATE		LAND DATE	03/25/2024 MLU
INC DATE		AG DATE	

NASSAU COUNTY PROPERTY

PAGE 1 of 1 2

VALUATION SUMMARY

VALUATION BY		STANDARD
Tax Group: 2	Tax Dist:	
BUILDING MARKET VALUE		202,351
TOTAL MARKET OB/XF VALUE		14,648
TOTAL LAND VALUE - MARKET		241,500
TOTAL MARKET VALUE		458,499
SOH/AGL Deduction		200,622
ASSESSED VALUE		257,877
TOTAL EXEMPTION VALUE	HX HB	50,000
BASE TAXABLE VALUE		207,877
TOTAL JUST VALUE		458,499
NCON VALUE		0
INCOME VALUE		
PREVIOUS YEAR MKT VALUE		415,180

PERMIT NUM	DESCRIPTION	AMT	ISSUED
20140031	ADDITION	99,261	01/07/2014
20121798	DRIVEWAY ROW	0	08/30/2012
20121479	200 AMP UG	700	07/24/2012
20121012	NEW SIDING,DOOR,W	7,000	05/31/2012
20070356	REPLACE WTR HEATE	0	02/27/2007
20060634	SLAT FENCE	500	03/30/2005

SALES DATA

OFF RECORD Number	DATE	TYPE INST	Q U	V I	RSN CD	SALE PRICE
1310/0082	4/15/2005	WD	Q	I		130,000
GRANTOR: KERR EUGENE N						
GRANTEE: DOUGHERTY ROBERT C						
0718/0770	11/18/1994	WD	U	I	01	42,000
GRANTOR: KERR FRANCES S						
GRANTEE: KERR EUGENE N						

BUILDING NOTES

BUILDING DIMENSIONS

FOP=[YR=2014] W6 STR=[YR=2014] N4 W12 S4 E12$ W17 S4
BAS=[YR=2014] W14 S34 BAS=[YR=1993] S23 E11 FOP=[YR=2014] S3
E2 STR=[YR=2014] S4 E5 N4 W5$ E14 N3 W16$ E26 N14 W8 N9 W29$
E29 N5 E4 N20 W19 N9$ S9 E19 S20 W4 S14 E8 N7 STR=[YR=2014]
E4 N7 W4 S7$ N40$.

EXTRA FEATURES

LN	OB/XF CODE	DESCRIPTION	BLD	CAP	L	W	UNITS	UT	Adj R	ADJ UNIT PRICE	ORIG COND	YEAR ON	YEAR ACTUAL	Q	% COND	OB/XF MKT VALUE	NOTES
1	0810	CONCRETE A	0	100	26	2	52.00	SF	6.50	6.50	100	1983	1983	3	41	139	
2	0510	GARAGE WD-	0	100	20	16	320.00	SF	35.00	35.00	100	1995	1995	3	23	2,576	
3	0810	CONCRETE A	0	100	99	16	1,584.00	SF	6.50	6.50	100	2012	2012	3	93	9,575	
4	0810	CONCRETE A	0	100	0	0	390.00	SF	6.50	6.50	100	2012	2012	3	93	2,358	

LAND DESCRIPTION

TOTAL OB/XF 14,648

LN	USE CODE	CLS	LAND USE DESCRIPTION	CAP	RD	LOC ZONE	FRONT	DEPTH	TOT LND UTS	UNIT TYPE	DT	DPTH FACT	% COND	TOT ADJ	UNIT PRICE	ADJ UNIT PRICE	LAND VALUE	OTHER ADJUSTMENTS AND NOTES	YEAR	DENSITY	DECL	FRZ	YR	CONSRV
1	000100	C	SFR	100	0006	R-1	75.00	147.00	75.00	FF	1	1.15	1.00	1.15	2,800.00	3,220.00	241,500							

REVIEW DATE 11/18/2019 BY DJA Total Acres: 0.00 Total Land Value: 241,500 Market: 0 Agricultural: 0 Common: 241,500 PRINTED 08/06/2024 BY SYS