LOT 10
IN OR 1943/1274
BEACH HAMMOCK PB 5/154

PALEY MIGUEL OSCAR/LINDO MONICA DE GREIFF
2678 RACHEAL AV
FERNANDINA BEACH, FL 32034

2024

00-00-31-1110-0010-0000

BUILDING CHARACTERISTICS

ELEMENT	CD	CONSTRUCTION
Exterior Wall	16	WD FR STUC 100
Roof Structur	08	IRREGULAR 100
Roof Cover	03	COMP SHNGL 100
Interior Wall	05	DRYWALL 100
Interior Floo	12	HARDWOOD 70
Interior Floo	15	HARDTILE 30
Air Condition	03	CENTRAL 100
Heating Type	04	AIR DUCTED 100
Bedrooms		3 100
Bathrooms		2 100
Frame	02	WOOD FRAME 100
Stories	1.	1. 100
Units		0 100
Occupancy	00	NONE 100
Quality	05	Quality Level 05
DOR CODE	0100	SINGLE FAMILY
MAP NUM		MKT AREA 01
NEIGHBORHOOD/LOC	1062.00	

AREA TYPE	TOTAL GROSS AREA	PCT OF BASE	TOT ADJ AREA	SUBAREA MARKET VALUE
BAS	1,505	100	1,505	218,676
DCK	588	10	59	8,573
FGR	440	55	242	35,163
FOP	68	30	20	2,906
FOP	39	30	12	1,743
TOTALS	2,640		1,838	267,060

MARKET ADJUSTMENTS

TYPE	MDL	EFF. AREA	TOT ADJ PTS	EFF. BASE RATE	REPL. COST NEW	AYB	EYB	ECON	FNCT		NORM	% COND
0900	01	1,838	131.3400	164.18	301,763	1999	2000	0	0	0	11.50	88.50

1 SNGL FAM – 0% - 0 Heated Area: 1505 HX Base Yr

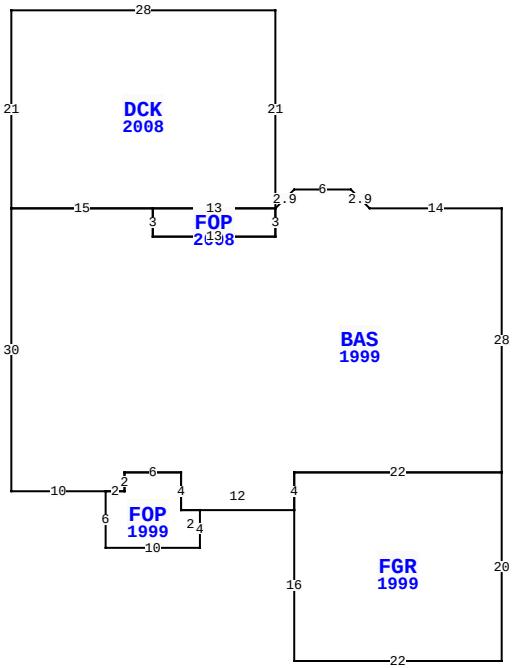

2678 RACHEAL AV, FERNANDINA BEACH

BLD DATE		LGL DATE	
XF DATE		LAND DATE	03/21/2024 MLU
INC DATE		AG DATE	

NASSAU COUNTY PROPERTY

PAGE 1 of 1 2

VALUATION SUMMARY

VALUATION BY	STANDARD
Tax Group: 2	Tax Dist:
BUILDING MARKET VALUE	267,060
TOTAL MARKET OB/XF VALUE	8,471
TOTAL LAND VALUE - MARKET	200,000
TOTAL MARKET VALUE	475,531
SOH/AGL Deduction	48,521
ASSESSED VALUE	427,010
TOTAL EXEMPTION VALUE	0
BASE TAXABLE VALUE	427,010
TOTAL JUST VALUE	475,531
NCON VALUE	0
INCOME VALUE	
PREVIOUS YEAR MKT VALUE	412,203

PERMIT NUM	DESCRIPTION	AMT	ISSUED
991134	XFOB	0	08/25/1999
984472	NEW CONSTR	70,448	11/04/1998

SALES DATA

OFF RECORD Number	DATE	TYPE INST	Q U	V I	RSN CD	SALE PRICE
1943/1274	10/15/2014	WD	Q	I	01	325,000
GRANTOR: BONIER FAMILY REVOCAB						
GRANTEE: PALEY MIGUEL OSCAR						
1604/1432	1/29/2009	WD	Q	I	01	260,000
GRANTOR: VURNAKES SCOTT A & MO						
GRANTEE: BONIER LAWRENCE R &						

BUILDING NOTES

BUILDING DIMENSIONS

BAS=[YR=1999] W14 L2 U2 W6 D2 L2 DCK=[YR=2008] N21 W28 S21 E15 FOP=[YR=2008] S3E13N3 W13$ E13$ S3 W13 N3W15 S30 E10 FOP=[YR=1999] S6 E10 N4 W2 N4 W6 S2 W2 $ E2 N2 E6 S4 E12 FGR=[YR=1999] S16 E22 N20 W22S4 $ N4 E22 N28$.

EXTRA FEATURES

LN	OB/XF CODE	DESCRIPTION	BLD	CAP	L	W	UNITS	UT	Adj R	ADJ UNIT PRICE	ORIG COND	YEAR ON	YEAR ACTUAL	Q	% COND	OB/XF MKT VALUE	NOTES
1	0877	JACUZZI	0	0	0	0	1.00	UT	1,000.00	1,000.00	100	1999	1999	3	20	200	
2	0500	FP-PRE FAB	0	0	0	0	1.00	UT	3,500.00	3,500.00	100	1999	1999	3	83	2,905	
3	1242	WD DECK A	0	0	5	10	50.00	SF	10.00	10.00	100	2011	2011	3	50	250	
4	0810	CONCRETE A	0	0	3	40	120.00	SF	6.50	6.50	100	1999	1999	3	77	601	
5	0810	CONCRETE A	0	0	0	0	902.00	SF	6.50	6.50	100	1999	1999	3	77	4,515	

LAND DESCRIPTION

TOTAL OB/XF 8,471

LN	USE CODE	CLS	LAND USE DESCRIPTION	CAP	RD	LOC ZONE	FRONT	DEPTH	TOT LND UTS	UNIT TYPE	DT	DPTH FACT	% COND	TOT ADJ	UNIT PRICE	ADJ UNIT PRICE	LAND VALUE	OTHER ADJUSTMENTS AND NOTES	YEAR	DENSITY	DECL	FRZ	YR	CONSRV
1	000100	C	SFR	0	0003	R-1	75.00	100.00	1.00	LT		1.00	1.00	1.00	200,000.00	200,000.00	200,000							

REVIEW DATE 01/17/2024 BY KBA Total Acres: 0.00 Total Land Value: 200,000 Market: 0 Agricultural: 0 Common: 200,000 PRINTED 08/06/2024 BY SYS