BLOCK R W101 FT OF LOT 7
IN OR 2118/784
ATLANTIC HIGHLANDS SUB

LUKE JASON
310 N 15 ST
FERNANDINA BEACH, FL 32034

2024

00-00-31-1060-000R-0071

NASSAU COUNTY PROPERTY

BUILDING CHARACTERISTICS

ELEMENT	CD	CONSTRUCTION
Exterior Wall	05	AVERAGE 100
Roof Structur	03	GABLE/HIP 100
Roof Cover	03	COMP SHNGL 100
Interior Wall	05	DRYWALL 100
Interior Floo	14	CARPET 80
Interior Floo	08	SHT VINYL 20
Air Condition	03	CENTRAL 100
Heating Type	04	AIR DUCTED 100
Bedrooms		3 100
Bathrooms		2 100
Frame	02	WOOD FRAME 100
Stories	2.	2. 100
Units		0 100
BUD8 Adjustme	02	DIST FB 100
Occupancy	00	NONE 100
Quality	03	Quality Level 03

DOR CODE	0100	SINGLE FAMILY	
MAP NUM		MKT AREA	01
NEIGHBORHOOD/LOC	1007.00		

AREA TYPE	TOTAL GROSS AREA	PCT OF BASE	TOT ADJ AREA	SUBAREA MARKET VALUE
BAS	1,216	100	1,216	98,406
FGR	504	55	277	22,416
FUS	448	100	448	36,255
PTO	60	5	3	243
STP	24	10	2	162
UOP	272	20	54	4,370
TOTALS	2,524		2,000	161,852

MARKET ADJUSTMENTS

TYPE	MDL	EFF. AREA	TOT ADJ PTS	EFF. BASE RATE	REPL. COST NEW	AYB	EYB	ECON	FNCT		NORM	% COND
0100	01	2,000	103.8800	98.69	197,380	1976	1980	0	0	0	18.00	82.00

1 SINGLE FAM – 100% - 2018 Heated Area: 1664 HX Base Yr 2018

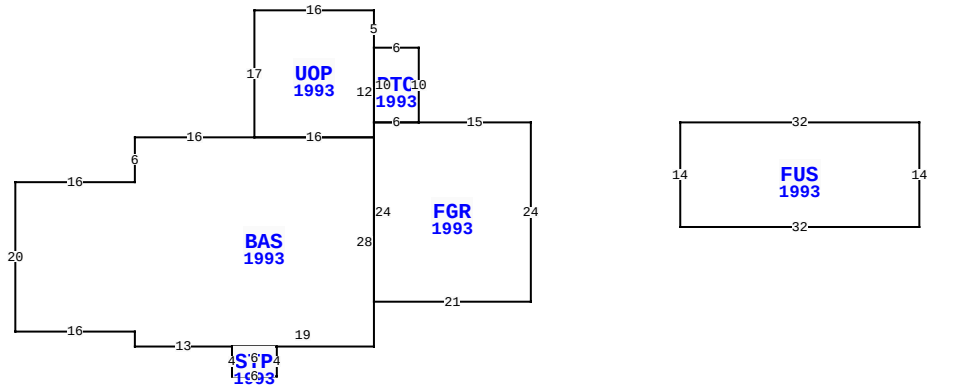

310 N 15TH ST, FERNANDINA BEACH

BLD DATE		LGL DATE	
XF DATE		LAND DATE	
INC DATE		AG DATE	

VALUATION SUMMARY

VALUATION BY		STANDARD
Tax Group: 2	Tax Dist:	
BUILDING MARKET VALUE		161,852
TOTAL MARKET OB/XF VALUE		1,461
TOTAL LAND VALUE - MARKET		275,000
TOTAL MARKET VALUE		438,313
SOH/AGL Deduction		235,032
ASSESSED VALUE		203,281
TOTAL EXEMPTION VALUE	HX HB	50,000
BASE TAXABLE VALUE		153,281
TOTAL JUST VALUE		438,313
NCON VALUE		0
INCOME VALUE		
PREVIOUS YEAR MKT VALUE		380,734

PERMIT NUM	DESCRIPTION	AMT	ISSUED
20122327	NEW HVAC	7,100	11/16/2012
20072073	REPIPE EXISTING F	3,000	11/09/2007
20021162	REPAIR HVAC UNIT	0	07/09/2002
6394	REPAIR/RRF	3,600	03/04/1991

SALES DATA

OFF RECORD Number	DATE	TYPE INST	Q U	V I	RSN CD	SALE PRICE
2118/0784	1/24/2017	QC	U	I	11	160,000
GRANTOR: SPENCER LISA ET AL						
GRANTEE: LUKE JASON						
2088/1429	12/07/2016	FJ	U	I	11	0
GRANTOR: LUKE SYLVIA J EST						
GRANTEE: SPENCER LISA ET AL						

BUILDING NOTES

BUILDING DIMENSIONS

FGR=[YR=1993] W15 PTO=[YR=1993] N10 W6 UOP=[YR=1993] N5 W16 S17 BAS=[YR=1993] W16 S6 W16 S20 E16 S2 E13 STP=[YR=1993] S4 E6 N4 W6$ E19N28 W16$ E16 N12$ S10 E6$ W6 S24 E21 N24$ PTR=E20 FUS=[YR=1993] E32 S14 W32 N14$ W20$.

EXTRA FEATURES

L N	OB/XF CODE	DESCRIPTION	BLD	CAP	L	W	UNITS	UT	Adj R	ADJ UNIT PRICE	ORIG COND	YEAR ON	YEAR ACTUAL	Q	% COND	OB/XF MKT VALUE	NOTES
1	0812	CONCRETE C	0	100	0	0	1,353.00	SF	4.00	4.00	100	1976	1976	3	27	1,461	

LAND DESCRIPTION

TOTAL OB/XF 1,461

L N	USE CODE	CLS	LAND USE DESCRIPTION	CAP	R D	LOC ZONE	FRONT	DEPTH	TOT LND UTS	UNIT TYPE	D T	DPTH FACT	% COND	TOT ADJ	UNIT PRICE	ADJ UNIT PRICE	LAND VALUE	OTHER ADJUSTMENTS AND NOTES	YEAR	DENSITY	DECL	FRZ	YR	CONSRV
1	000100	C	SFR	100	0006	R-1	137.00	101.00	1.00	LT		1.00	1.00	1.00	275,000.00	275,000.00	275,000							

REVIEW DATE 05/12/2019 BY KBA Total Acres: 0.00 Total Land Value: 275,000 Market: 0 Agricultural: 0 Common: 275,000 PRINTED 08/06/2024 BY SYS