BLOCK 24 LOT 10
ESMT OR 1452/153
AMELIA PARK PHASE 2 UNIT 9

TURNER GREGORY & VIRGINIA
108 HEGLAR OAKS COURT
HERNDON, VA 20170

2024

00-00-31-102P-0024-0100

NASSAU COUNTY PROPERTY

BUILDING CHARACTERISTICS

ELEMENT	CD	CONSTRUCTION
Exterior Wall	10	ABOVE AVG 100
Roof Structur	08	IRREGULAR 100
Roof Cover	03	COMP SHNGL 100
Interior Wall	05	DRYWALL 100
Interior Floo	12	HARDWOOD 70
Interior Floo	11	CLAY TILE 30
Air Condition	03	CENTRAL 100
Heating Type	04	AIR DUCTED 100
Bedrooms		3 100
Bathrooms		3.5 100
Frame	02	WOOD FRAME 100
Stories	2.	2. 100
Units		0 100
Occupancy	00	NONE 100
Quality	03	Quality Level 03
DOR CODE	0100	SINGLE FAMILY
MAP NUM		MKT AREA 01
NEIGHBORHOOD/LOC	1031.00	

AREA TYPE	TOTAL GROSS AREA	PCT OF BASE	TOT ADJ AREA	SUBAREA MARKET VALUE
BAL	99	15	15	3,045
BAS	1,620	100	1,620	328,831
FGR	528	55	290	58,864
FOP	73	30	22	4,466
FOP	152	30	46	9,337
FSP	88	40	35	7,104
FUS	1,023	100	1,023	207,651
STP	16	10	2	406
STP	24	10	2	406
STR	88	10	9	1,827
TOTALS	3,711		3,064	621,938

MARKET ADJUSTMENTS

TYPE	MDL	EFF. AREA	TOT ADJ PTS	EFF. BASE RATE	REPL. COST NEW	AYB	EYB	ECON	FNCT		NORM	% COND
0500	11	3,064	139.5070	209.26	641,173	2016	2016	0	0	0	3.00	97.00

1 SFR CUST – 0% - 0 Heated Area: 2643 HX Base Yr

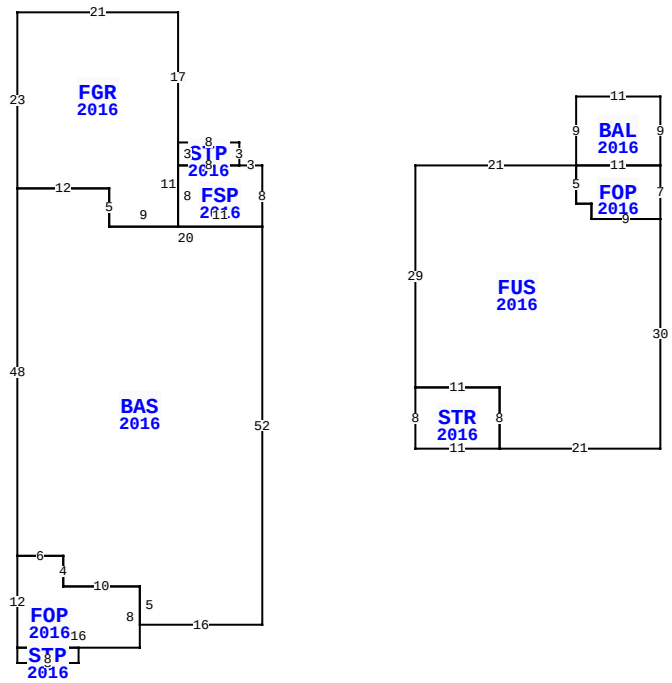

1630 NOLEN LN, FERNANDINA BEACH

BLD DATE		LGL DATE	
XF DATE		LAND DATE	03/21/2024 MLU
INC DATE		AG DATE	

VALUATION SUMMARY

VALUATION BY	STANDARD
Tax Group: 2	Tax Dist:
BUILDING MARKET VALUE	621,938
TOTAL MARKET OB/XF VALUE	1,011
TOTAL LAND VALUE - MARKET	160,000
TOTAL MARKET VALUE	782,949
SOH/AGL Deduction	122,560
ASSESSED VALUE	660,389
TOTAL EXEMPTION VALUE	0
BASE TAXABLE VALUE	660,389
TOTAL JUST VALUE	782,949
NCON VALUE	0
INCOME VALUE	
PREVIOUS YEAR MKT VALUE	612,030

PERMIT NUM	DESCRIPTION	AMT	ISSUED
20153013	CO ISSUED	0	07/20/2016
20153013	NEW CONSTR	339,883	12/31/2015

SALES DATA

OFF RECORD Number	DATE	TYPE INST	Q / U	V / I	RSN CD	SALE PRICE
2411/0987	11/23/2020	WD	Q	I	01	667,500
GRANTOR: KOLB CAROLYN LEE & SU						
GRANTEE: TURNER GREGORY & VI						
1938/0549	9/19/2014	WD	Q	V	01	98,000
GRANTOR: NEW SOUTH BUILDERS LL						
GRANTEE: KOLB CAROLYN LEE &						

BUILDING NOTES

BUILDING DIMENSIONS

FSP=[YR=2016] W3 STP=[YR=2016] N3 W8 FGR=[YR=2016] N17 W21 S23 BAS=[YR=2016] S48 FOP=[YR=2016] S12 STP=[YR=2016] S2 E8 N2 W8$ E16 N8 W10 N4 W6$ E6 S4 E10 S5 E16 N52 W20 N5 W12$ E12 S5 E9 N11$ S3 E8$ W8 S8 E11 N8 $ PTR=E20 FUS=[YR=2016] E21 BAL=[YR=2016] N9 E11 S9 FOP=[YR=2016] S7 W9 N2 W2 N5 E11$ W11$ S5 E2 S2 E9 S30 W21 STR=[YR=2016] W11 N8 E11 S8$ N8 W11 N29$ W20$.

EXTRA FEATURES

LN	OB/XF CODE	DESCRIPTION	BLD	CAP	L	W	UNITS	UT	Adj R	ADJ UNIT PRICE	ORIG COND	YEAR ON	YEAR ACTUAL	Q	% COND	OB/XF MKT VALUE	NOTES
1	0810	CONCRETE A	0	0	0	0	162.00	SF	6.50	6.50	100	2016	2016	3	96	1,011	

LAND DESCRIPTION

TOTAL OB/XF 1,011

LN	USE CODE	CLS	LAND USE DESCRIPTION	CAP	RD	LOC ZONE	FRONT	DEPTH	TOT LND UTS	UNIT TYPE	DT	DPTH FACT	% COND	TOT ADJ	UNIT PRICE	ADJ UNIT PRICE	LAND VALUE	OTHER ADJUSTMENTS AND NOTES	YEAR	DENSITY	DECL	FRZ	YR	CONSRV
1	000100	C	SFR	0		R-2	0.00	0.00	40.00	FF		1.00	1.00	1.00	4,000.00	4,000.00	160,000							

REVIEW DATE 01/14/2021 BY TWA Total Acres: 0.00 Total Land Value: 160,000 Market: 0 Agricultural: 0 Common: 160,000 PRINTED 08/06/2024 BY SYS