BLOCK 23 LOT 10
IN OR 1351/1682
AMELIA PARK PHASE 2 UNIT 8

KOFORD JODIE A
1782 HEATHER ST
FERNANDINA BEACH, FL 32034

2024

00-00-31-102P-0023-0100

BUILDING CHARACTERISTICS

ELEMENT	CD	CONSTRUCTION
Exterior Wall	10	ABOVE AVG 100
Roof Structur	08	IRREGULAR 100
Roof Cover	12	MODULAR MT 90
Roof Cover	01	MINIMUM 10
Interior Wall	05	DRYWALL 100
Interior Floo	16	EPOXY STRP 100
Air Condition	03	CENTRAL 100
Heating Type	04	AIR DUCTED 100
Bedrooms		2 100
Bathrooms		2 100
Frame	02	WOOD FRAME 100
Stories	1.	1. 100
Units		0 100
Occupancy	00	NONE 100
Quality	03	Quality Level 03
DOR CODE	0100	SINGLE FAMILY
MAP NUM		MKT AREA 01
NEIGHBORHOOD/LOC	1031.00	

AREA TYPE	TOTAL GROSS AREA	PCT OF BASE	TOT ADJ AREA	SUBAREA MARKET VALUE
BAS	1,630	100	1,630	341,866
FDG	529	60	317	66,486
PTO	80	5	4	839
STR	16	10	2	419
STR	18	10	2	419
UOP	496	20	99	20,763
USP	130	30	39	8,179
TOTALS	2,899		2,093	438,972

MARKET ADJUSTMENTS

TYPE	MDL	EFF. AREA	TOT ADJ PTS	EFF. BASE RATE	REPL. COST NEW	AYB	EYB	ECON	FNCT		NORM	% COND
0500	11	2,093	150.3477	225.52	472,013	2008	2008	0	0	0	7.00	93.00

1 SFR CUST – 100% - 2009 Heated Area: 1630 HX Base Yr 2009

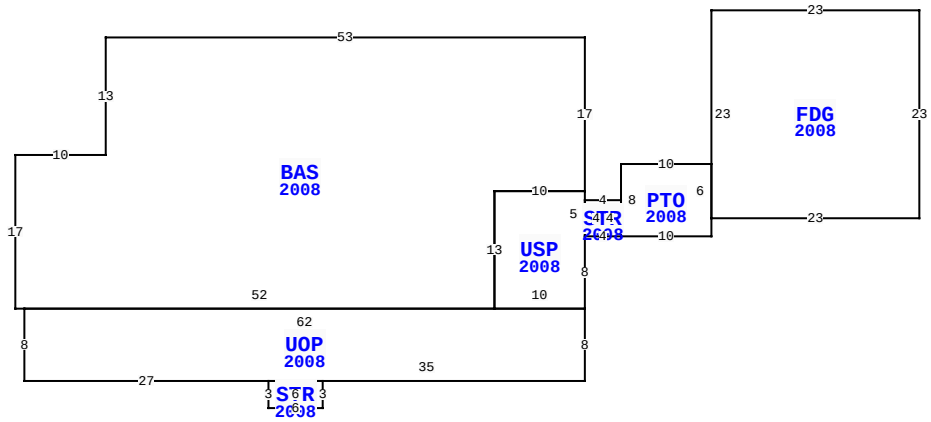

1782 HEATHER ST, FERNANDINA BEACH

BLD DATE		LGL DATE	
XF DATE		LAND DATE	03/21/2024 MLU
INC DATE		AG DATE	

NASSAU COUNTY PROPERTY

PAGE 1 of 1 2

VALUATION SUMMARY

VALUATION BY		STANDARD
Tax Group: 2	Tax Dist:	
BUILDING MARKET VALUE		438,972
TOTAL MARKET OB/XF VALUE		1,041
TOTAL LAND VALUE - MARKET		200,000
TOTAL MARKET VALUE		640,013
SOH/AGL Deduction		344,370
ASSESSED VALUE		295,643
TOTAL EXEMPTION VALUE	HX HB	50,000
BASE TAXABLE VALUE		245,643
TOTAL JUST VALUE		640,013
NCON VALUE		0
INCOME VALUE		
PREVIOUS YEAR MKT VALUE		514,205

PERMIT NUM	DESCRIPTION	AMT	ISSUED
20080361	OTHER	1,500	03/10/2008
20071941	GAS	495	10/12/2007
20070829	ELEC OTHER	6,500	05/15/2007
20070836	H/AC	6,645	05/15/2007
20070631	OTHER	4,700	04/16/2007
20070209	CO ISSUED	145,445	02/06/2007

SALES DATA

OFF RECORD Number	DATE	TYPE INST	Q / U	V / I	RSN CD	SALE PRICE
1351/1682	9/22/2005	WD	Q	V		80,000

GRANTOR: AMELIA PARK DEVELOPME

GRANTEE: KOFORD JODIE A

BUILDING NOTES

BUILDING DIMENSIONS

BAS=[YR=2008] W53S13W10S17E1 UOP=[YR=2008] S8E27
STR=[YR=2008] S3E6N3W6 $ E35N8 USP=[YR=2008] N8
STR=[YR=2008] E4 PTO=[YR=2008] E10N2 FDG=[YR=2008] E23N23
W23S23$ N6W10S8$ N4W4S4$ N5W10 S13E10$ W62$ E52N13E10N17$.

EXTRA FEATURES

LN	OB/XF CODE	DESCRIPTION	BLD	CAP	L	W	UNITS	UT	Adj R	ADJ UNIT PRICE	ORIG COND	YEAR ON	YEAR ACTUAL	Q	% COND	OB/XF MKT VALUE	NOTES
1	0810	CONCRETE A	0	100	9	20	180.00	SF	6.50	6.50	100	2008	2008	3	89	1,041	

LAND DESCRIPTION

TOTAL OB/XF 1,041

LN	USE CODE	CLS	LAND USE DESCRIPTION	CAP	RD	LOC ZONE	FRONT	DEPTH	TOT LND UTS	UNIT TYPE	DT	DPTH FACT	% COND	TOT ADJ	UNIT PRICE	ADJ UNIT PRICE	LAND VALUE	OTHER ADJUSTMENTS AND NOTES	YEAR	DENSITY	DECL	FRZ	YR	CONSRV
1	000100	C	SFR	100		R-2	0.00	0.00	50.00	FF		1.00	1.00	1.00	4,000.00	4,000.00	200,000							

REVIEW DATE 05/12/2019 BY KBA Total Acres: 0.00 Total Land Value: 200,000 Market: 0 Agricultural: 0 Common: 200,000 PRINTED 08/06/2024 BY SYS