BLOCK 20 LOT 7
AMELIA PARK PHASE 2 UNIT 8
PB 6/391

CONRAD FAMILY TRUST/CONRAD ROGER J TRUSTEE
1853 NEIGHBOR ST
FERNANDINA BEACH, FL 32034

2024

00-00-31-102P-0020-0070

NASSAU COUNTY PROPERTY

BUILDING CHARACTERISTICS

ELEMENT	CD	CONSTRUCTION
Exterior Wall	14	WD SHINGLE 100
Roof Structur	08	IRREGULAR 100
Roof Cover	03	COMP SHNGL 100
Interior Wall	05	DRYWALL 100
Interior Floo	15	HARDTILE 70
Interior Floo	14	CARPET 30
Air Condition	03	CENTRAL 100
Heating Type	04	AIR DUCTED 100
Bedrooms		3 100
Bathrooms		2.5 100
Frame	02	WOOD FRAME 100
Stories	1.	1. 100
Units		0 100
Occupancy	00	NONE 100
Quality	03	Quality Level 03
DOR CODE	0100	SINGLE FAMILY
MAP NUM		MKT AREA 01
NEIGHBORHOOD/LOC	1031.00	

AREA TYPE	TOTAL GROSS AREA	PCT OF BASE	TOT ADJ AREA	SUBAREA MARKET VALUE
BAS	2,357	100	2,357	473,687
FDG	462	60	277	55,669
FOP	48	30	14	2,814
FOP	84	30	25	5,024
FOP	174	30	52	10,450
FOP	288	30	86	17,283
PTO	60	5	3	603
PTO	256	5	13	2,612
TOTALS	3,729		2,827	568,144

MARKET ADJUSTMENTS

TYPE	MDL	EFF. AREA	TOT ADJ PTS	EFF. BASE RATE	REPL. COST NEW	AYB	EYB	ECON	FNCT		NORM	% COND
0500	11	2,827	146.4259	219.64	620,922	2006	2006	0	0	0	8.50	91.50

1 SFR CUST - 100% - 2021 Heated Area: 2357 HX Base Yr 2021

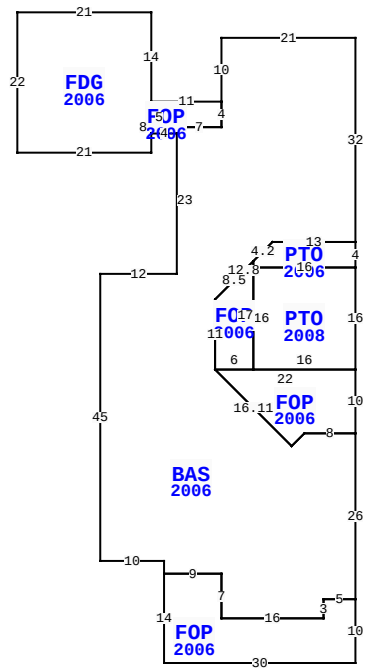

1853 NEIGHBOR ST, FERNANDINA BEACH

BLD DATE		LGL DATE	
XF DATE		LAND DATE	03/21/2024 MLU
INC DATE		AG DATE	

VALUATION SUMMARY

VALUATION BY		STANDARD
Tax Group: 2	Tax Dist:	
BUILDING MARKET VALUE		568,144
TOTAL MARKET OB/XF VALUE		10,773
TOTAL LAND VALUE - MARKET		240,000
TOTAL MARKET VALUE		818,917
SOH/AGL Deduction		231,851
ASSESSED VALUE		587,066
TOTAL EXEMPTION VALUE	HX HB	50,000
BASE TAXABLE VALUE		537,066
TOTAL JUST VALUE		818,917
NCON VALUE		0
INCOME VALUE		
PREVIOUS YEAR MKT VALUE		661,122

PERMIT NUM	DESCRIPTION	AMT	ISSUED
20072242	XFOB	4,450	12/17/2007
20062604	OTHER	1,000	11/28/2006
20061898	H/AC	8,880	08/10/2006
20061841	NEW CONSTR	10,000	08/02/2006
20061635	GAS	1,000	07/11/2006
20061104	NEW CONSTR	6,749	05/18/2006

SALES DATA

OFF RECORD Number	DATE	TYPE INST	Q U	V I	RSN CD	SALE PRICE
2346/0809	3/12/2020	WD	Q	I	01	605,000
GRANTOR: JERVIS WALTER T & HAW						
GRANTEE: CONRAD FAMILY TRUST						
1960/0223	1/27/2015	WD	Q	I	01	484,900
GRANTOR: GARBER VAN L & ANN S						
GRANTEE: JERVIS WALTER T & H						

BUILDING NOTES

BUILDING DIMENSIONS

BAS=[YR=2006] W21S10 FOP=[YR=2006] W11 FDG=[YR=2006] N14W21S22E21N8$S5E4N1 E7N4$ S4W7S23W12S45E10S2 FOP=[YR=2006] S14E30N10W5S3W16N7W9$ E9S7E16N3E5N26 FOP=[YR=2006] N10 PTO=[YR=2008] N16 PTO=[YR=2006] N4W13 D3 L3 FOP=[YR=2006] D6 L6 S11 E6N17 $ S1 E16$W16S16E16$ W22 D12 R12 U2 R2 E8$ W8 D2 L2 U12 L12 N11 U9 R9 E13N32$.

EXTRA FEATURES

LN	OB/XF CODE	DESCRIPTION	BLD	CAP	L	W	UNITS	UT	Adj R	ADJ UNIT PRICE	ORIG COND	YEAR ON	YEAR ACTUAL	Q	% COND	OB/XF MKT VALUE	NOTES
1	0500	FP-PRE FAB	0	100	0	0	1.00	UT	3,500.00	3,500.00	100	2006	2006	3	90	3,150	
2	0810	CONCRETE A	0	100	0	0	970.00	SF	6.50	6.50	100	2006	2006	3	87	5,485	
3	0819	CONC 12"	0	100	3	3	9.00	SF	9.50	9.50	100	2006	2006	3	87	74	
4	0825	BRICK	0	100	10	6	60.00	SF	12.50	12.50	100	2006	2006	3	96	720	
5	0910	SCRN RM L	0	100	16	16	256.00	SF	15.00	15.00	100	2008	2008	3	35	1,344	

LAND DESCRIPTION

TOTAL OB/XF 10,773

LN	USE CODE	CLS	LAND USE DESCRIPTION	CAP	RD	LOC ZONE	FRONT	DEPTH	TOT LND UTS	UNIT TYPE	DT	DPTH FACT	% COND	TOT ADJ	UNIT PRICE	ADJ UNIT PRICE	LAND VALUE	OTHER ADJUSTMENTS AND NOTES	YEAR	DENSITY	DECL	FRZ	YR	CONSRV
1	000100	C	SFR	100		R-2	0.00	0.00	60.00	FF		1.00	1.00	1.00	4,000.00	4,000.00	240,000							

REVIEW DATE 05/12/2019 BY KBA Total Acres: 0.00 Total Land Value: 240,000 Market: 0 Agricultural: 0 Common: 240,000 PRINTED 08/06/2024 BY SYS