BLOCK 19 LOT 9 &
N5 FT OF LOT 10 BLOCK 19
IN OR 2225/568

BURKETT HILLORY P JR & PAMELA
1714 HEATHER STREET
FERNANDINA BEACH, FL 32034

2024

00-00-31-102P-0019-0090

NASSAU COUNTY PROPERTY

BUILDING CHARACTERISTICS

ELEMENT	CD	CONSTRUCTION
Exterior Wall	10	ABOVE AVG 100
Roof Structur	08	IRREGULAR 100
Roof Cover	03	COMP SHNGL 100
Interior Wall	05	DRYWALL 100
Interior Floo	15	HARDTILE 70
Interior Floo	14	CARPET 30
Air Condition	03	CENTRAL 100
Heating Type	04	AIR DUCTED 100
Bedrooms		5 100
Bathrooms		5.5 100
Frame	02	WOOD FRAME 100
Stories	2.	2. 100
Units		0 100
Occupancy	00	NONE 100
Quality	03	Quality Level 03
DOR CODE	0100	SINGLE FAMILY
MAP NUM		MKT AREA 01
NEIGHBORHOOD/LOC	1031.00	

AREA TYPE	TOTAL GROSS AREA	PCT OF BASE	TOT ADJ AREA	SUBAREA MARKET VALUE
AOF	255	110	280	50,830
APT	354	100	354	64,264
FOP	147	30	44	7,988
HXB	1,309	100	1,309	237,631
HXB	1,971	100	1,971	357,807
HXG	492	55	271	49,196
HXP	184	30	55	9,984
HXP	237	30	71	12,889
HXP	285	30	86	15,612
HXU	117	55	64	11,619
TOTALS	5,378		4,517	819,998

MARKET ADJUSTMENTS

TYPE	MDL	EFF. AREA	TOT ADJ PTS	EFF. BASE RATE	REPL. COST NEW	AYB	EYB	ECON	FNCT		NORM	% COND
0500	11	4,517	132.2654	198.40	896,173	2005	2005	0	0	0	8.50	91.50

1 SFR CUST – 84.71% - 2021 Heated Area: 3889 HX Base Yr 2021

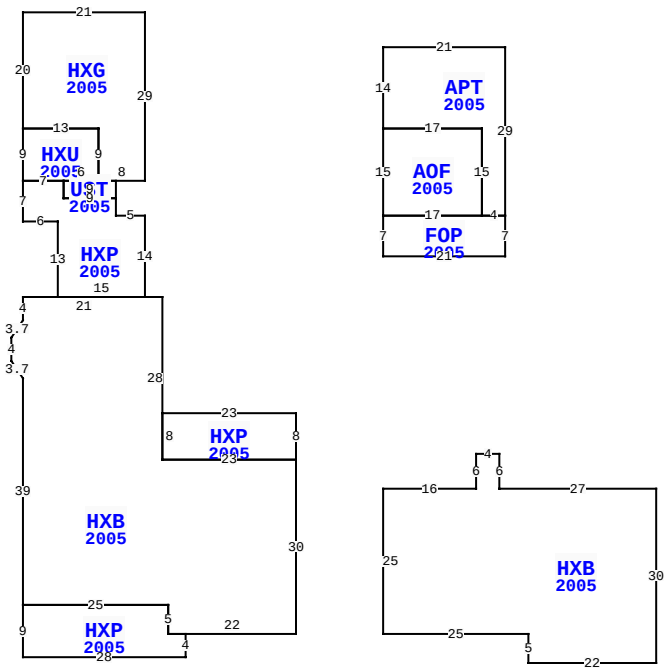

** This building has 11 Sub-Areas

1714 HEATHER ST, FERNANDINA BEACH

BLD DATE		LGL DATE	
XF DATE		LAND DATE	03/21/2024 MLU
INC DATE		AG DATE	

VALUATION SUMMARY

VALUATION BY		STANDARD
Tax Group: 2	Tax Dist:	
BUILDING MARKET VALUE		819,998
TOTAL MARKET OB/XF VALUE		31,716
TOTAL LAND VALUE - MARKET		220,000
TOTAL MARKET VALUE		1,071,714
SOH/AGL Deduction		275,098
ASSESSED VALUE		796,616
TOTAL EXEMPTION VALUE	HX HB	50,000
BASE TAXABLE VALUE		746,616
TOTAL JUST VALUE		1,071,714
NCON VALUE		0
INCOME VALUE		
PREVIOUS YEAR MKT VALUE		876,861

PERMIT NUM	DESCRIPTION	AMT	ISSUED
20190021	INT REM	0	01/11/2019
20052057	OTHER	1,000	06/24/2005
20051936	XFOB	7,000	06/08/2005
20042384	NEW CONSTR	3,000	12/17/2004
20042174	GAS	1,000	11/18/2004
20041989	H/AC	5,000	10/28/2004

SALES DATA

OFF RECORD Number	DATE	TYPE INST	Q / U	V / I	RSN CD	SALE PRICE
2225/0568	9/21/2018	WD	Q	I	01	670,000
GRANTOR: CHAPMAN ELIZABETH I						
GRANTEE: BURKETT HILLORY P J						
1225/0680	4/26/2004	WD	Q	V		79,800
GRANTOR: BRYLEN HOMES LTD						
GRANTEE: CHAPMAN A BYRON III						

BUILDING NOTES

BUILDING DIMENSIONS

HXB=[YR=2005] N30 HXP=[YR=2005] N8 W23 S8 E23$W23 N28 W3
HXP=[YR=2005] N14 W5 N3 UST=[YR=2005] N3 W9 S3 E9$ W9 N3
HXU=[YR=2005] E6 HXG=[YR=2005] E8 N29 W21 S20 E13 S9$N9 W13
S9 E7$ W7 S7 E6 S13 E15$W21 S4 L2 D3 S4 D3 R2
S39HXP=[YR=2005] S9 E28N4 W3 N5 W25$E25S5 E22$ PTR=E15
HXB=[YR=2005] E25 S5 E22 N30 W27 N6 W4 S6 W16 S25$ PTR=N65
FOP=[YR=2005] E21 N7 APT=[YR=2005] N29 W21 S14 E17 S15
E4$W4 AOF=[YR=2005] N15 W17 S15 E17$W17 S7$ S65$ W15$.

EXTRA FEATURES

L N	OB/XF CODE	DESCRIPTION	BLD	CAP	L	W	UNITS	UT	Adj R	ADJ UNIT PRICE	ORIG COND	YEAR ON	YEAR ACTUAL	Q	% COND	OB/XF MKT VALUE	NOTES
1	0500	FP-PRE FAB	0	100	0	0	1.00	UT	3,500.00	3,500.00	100	2005	2005	3	89	3,115	
2	0825	BRICK	0	100	17	7	119.00	SF	12.50	12.50	100	2005	2005	3	96	1,428	
3	0861	POOL GUNIT	0	100	0	0	305.00	SF	85.00	85.00	100	2005	2005	3	40	10,370	
4	0871	POOL HTR R	0	100	0	0	1.00	UT	4,000.00	4,000.00	100	2005	2005	3	24	960	
5	0877	JACUZZI	0	100	0	0	1.00	UT	1,000.00	1,000.00	100	2005	2005	3	24	240	
6	0845	KOOL DECK	0	100	0	0	327.00	SF	14.50	14.50	100	2005	2005	3	86	4,078	
7	0910	SCRN RM L	0	100	0	0	632.00	SF	15.00	15.00	100	2005	2005	3	24	2,275	
8	0810	CONCRETE A	0	100	8	4	32.00	SF	6.50	6.50	100	2005	2005	3	86	179	
9	0855	CONC PAVER	0	100	0	0	120.00	SF	20.00	20.00	100	2005	2005	3	86	2,064	
10	0810	CONCRETE A	0	100	0	0	925.00	SF	6.50	6.50	100	2005	2005	3	86	5,171	

TOTAL OB/XF 29,880

LAND DESCRIPTION

L N	USE CODE	CLS	LAND USE DESCRIPTION	CAP	R D	LOC ZONE	FRONT	DEPTH	TOT LND UTS	UNIT TYPE	D T	DPTH FACT	% COND	TOT ADJ	UNIT PRICE	ADJ UNIT PRICE	LAND VALUE	OTHER ADJUSTMENTS AND NOTES	YEAR	DENSITY	DECL	FRZ	YR	CONSRV
1	000100	C	SFR	100		R-2	0.00	0.00	55.00	FF		1.00	1.00	1.00	4,000.00	4,000.00	220,000							

REVIEW DATE 05/12/2019 BY KBA Total Acres: 0.00 Total Land Value: 220,000 Market: 0 Agricultural: 0 Common: 220,000 PRINTED 08/06/2024 BY SYS

BLOCK 19 LOT 9 &
N5 FT OF LOT 10 BLOCK 19
IN OR 2225/568

BURKETT HILLORY P JR & PAMELA
1714 HEATHER STREET
FERNANDINA BEACH, FL 32034

2024

00-00-31-102P-0019-0090

NASSAU COUNTY PROPERTY

BUILDING CHARACTERISTICS

ELEMENT	CD	CONSTRUCTION

DOR CODE	0100	SINGLE FAMILY	
MAP NUM		MKT AREA	01
NEIGHBORHOOD/LOC	1031.00		

AREA TYPE	TOTAL GROSS AREA	PCT OF BASE	TOT ADJ AREA	SUBAREA MARKET VALUE
TOTALS				

MARKET ADJUSTMENTS

TYPE	MDL	EFF. AREA	TOT ADJ PTS	EFF. BASE RATE	REPL. COST NEW	AYB	EYB	ECON	FNCT		NORM	% COND

VALUATION SUMMARY

VALUATION BY		STANDARD
Tax Group: 2	Tax Dist:	
BUILDING MARKET VALUE		819,998
TOTAL MARKET OB/XF VALUE		31,716
TOTAL LAND VALUE - MARKET		220,000
TOTAL MARKET VALUE		1,071,714
SOH/AGL Deduction		275,098
ASSESSED VALUE		796,616
TOTAL EXEMPTION VALUE	HX HB	50,000
BASE TAXABLE VALUE		746,616
TOTAL JUST VALUE		1,071,714
NCON VALUE		0
INCOME VALUE		
PREVIOUS YEAR MKT VALUE		876,861

PERMIT NUM	DESCRIPTION	AMT	ISSUED
20041990	H/AC	9,000	10/28/2004
20041725	NEW CONSTR	6,000	09/23/2004
20041542	SWIM POOL	29,000	08/25/2004
20041543	ELEC OTHER	1,000	08/25/2004
20041254	NEW CONSTR	306,000	07/08/2004
20041255	NEW CONSTR	41,000	07/08/2004

SALES DATA

OFF RECORD Number	DATE	TYPE INST	Q U /	V I /	RSN CD	SALE PRICE
2225/0568	9/21/2018	WD	Q	I	01	670,000
GRANTOR: CHAPMAN ELIZABETH I						
GRANTEE: BURKETT HILLORY P J						
1225/0680	4/26/2004	WD	Q	V		79,800
GRANTOR: BRYLEN HOMES LTD						
GRANTEE: CHAPMAN A BYRON III						

BLD DATE		LGL DATE	
XF DATE		LAND DATE	03/21/2024 MLU
INC DATE		AG DATE	

BUILDING NOTES

BUILDING DIMENSIONS

EXTRA FEATURES

LN	OB/XF CODE	DESCRIPTION	BLD	CAP	L	W	UNITS	UT	Adj R	ADJ UNIT PRICE	ORIG COND	YEAR ON	YEAR ACTUAL	Q	% COND	OB/XF MKT VALUE	NOTES
11	0810	CONCRETE A	0	100	12	4	48.00	SF	6.50	6.50	100	2005	2005	3	86	268	
12	0810	CONCRETE A	0	100	23	4	92.00	SF	6.50	6.50	100	2005	2005	3	86	514	
13	0450	PREFAB FNC	0	100	26	5	130.00	LF	16.00	16.00	100	2005	2005	3	24	499	
14	0478	VF 6 SLAT	0	100	0	0	66.00	LF	7.50	7.50	100	2005	2005	3	66	327	
15	0478	VF 6 SLAT	0	100	0	0	23.00	LF	15.00	15.00	100	2005	2005	3	66	228	

LAND DESCRIPTION

TOTAL OB/XF 1,836

LN	USE CODE	CLS	LAND USE DESCRIPTION	CAP	RD	LOC ZONE	FRONT	DEPTH	TOT LND UTS	UNIT TYPE	DT	DPTH FACT	% COND	TOT ADJ	UNIT PRICE	ADJ UNIT PRICE	LAND VALUE	OTHER ADJUSTMENTS AND NOTES	YEAR	DENSITY	DECL	FRZ	YR	CONSRV

REVIEW DATE 05/12/2019 BY KBA Total Acres: 0.00 Total Land Value: 220,000 Market: 0 Agricultural: 0 Common: 220,000 PRINTED 08/06/2024 BY SYS