BLOCK 17 LOT 3
IN OR 1812/1900
AMELIA PARK PHASE 1 UNIT 7

CULTICE GALE D & STEPHANIE J
1859 PERIMETER PARK RD
FERNANDINA BEACH, FL 32034

2024

00-00-31-102P-0017-0030

NASSAU COUNTY PROPERTY

BUILDING CHARACTERISTICS

ELEMENT	CD	CONSTRUCTION
Exterior Wall	10	ABOVE AVG 100
Roof Structur	08	IRREGULAR 100
Roof Cover	03	COMP SHNGL 100
Interior Wall	05	DRYWALL 100
Interior Floo	15	HARDTILE 70
Interior Floo	14	CARPET 30
Air Condition	03	CENTRAL 100
Heating Type	04	AIR DUCTED 100
Bedrooms		3 100
Bathrooms		2.5 100
Frame	02	WOOD FRAME 100
Stories	1.5	1.5 100
Units		0 100
Occupancy	00	NONE 100
Quality	03	Quality Level 03
DOR CODE	0100	SINGLE FAMILY
MAP NUM		MKT AREA 01
NEIGHBORHOOD/LOC	1031.00	

AREA TYPE	TOTAL GROSS AREA	PCT OF BASE	TOT ADJ AREA	SUBAREA MARKET VALUE
BAS	1,595	100	1,595	308,640
FGR	424	55	233	45,087
FOP	160	30	48	9,288
FOP	160	30	48	9,288
FSP	201	40	80	15,480
FUS	944	100	944	182,668
TOTALS	3,484		2,948	570,450

MARKET ADJUSTMENTS

TYPE	MDL	EFF. AREA	TOT ADJ PTS	EFF. BASE RATE	REPL. COST NEW	AYB	EYB	ECON	FNCT		NORM	% COND
0500	11	2,948	140.9878	211.48	623,443	2005	2005	0	0	0	8.50	91.50

1 SFR CUST – 100% - 2013 Heated Area: 2539 HX Base Yr 2013

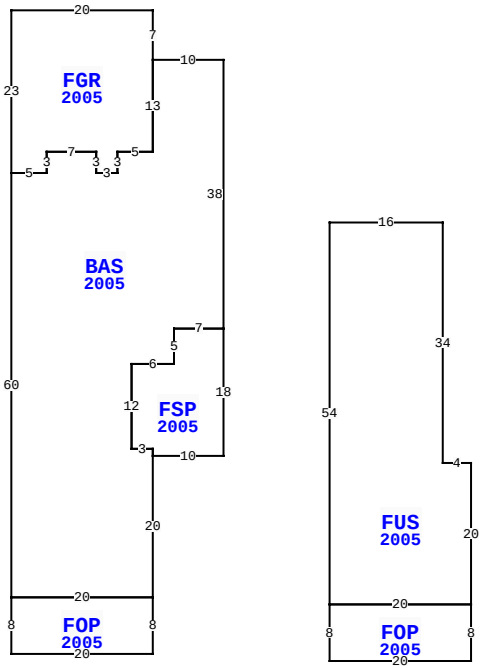

1859 W PERIMETER PARK RD, FERNANDINA BEACH

BLD DATE	01/03/2007 PH	LGL DATE	03/21/2024 MLU
XF DATE		LAND DATE	
INC DATE		AG DATE	

VALUATION SUMMARY

VALUATION BY		STANDARD
Tax Group: 2	Tax Dist:	
BUILDING MARKET VALUE		570,450
TOTAL MARKET OB/XF VALUE		7,876
TOTAL LAND VALUE - MARKET		176,000
TOTAL MARKET VALUE		754,326
SOH/AGL Deduction		395,600
ASSESSED VALUE		358,726
TOTAL EXEMPTION VALUE	HX HB	50,000
BASE TAXABLE VALUE		308,726
TOTAL JUST VALUE		754,326
NCON VALUE		0
INCOME VALUE		
PREVIOUS YEAR MKT VALUE		612,076

PERMIT NUM	DESCRIPTION	AMT	ISSUED
20062421	XFOB	2,745	10/30/2006
20042325	GAS	1,000	12/13/2004
20041924	NEW CONSTR	2,000	10/20/2004
20041873	H/AC	7,000	10/15/2004
20041184	NEW CONSTR	224,000	06/28/2004

SALES DATA

OFF RECORD Number	DATE	TYPE INST	Q / U	V / I	RSN CD	SALE PRICE
1812/1900	9/08/2012	WD	Q	I	02	400,000
GRANTOR: FISHER CYNTHIA K						
GRANTEE: CULTICE GALE D & ST						
1770/1782	12/21/2011	WD	Q	I	02	415,000
GRANTOR: BAMBROUGH DARLENE & N						
GRANTEE: FISHER CYNTHIA K						

BUILDING NOTES

BUILDING DIMENSIONS

BAS=[YR=2005] W10 FGR=[YR=2005] N7 W20 S23 E5 N3 E7 S3 E3 N3 E5 N13 $ S13 W5 S3 W3 N3 W7 S3 W5 S60 FOP=[YR=2005] S8 E20 N8 W20 $ E20 N20 FSP=[YR=2005] E10 N18 W7 S5 W6 S12 E3 S1 $ N1 W3 N12 E6 N5 E7 N38 $ PTR= E15 S23 FUS=[YR=2005] E16 S34 E4 S20 FOP=[YR=2005] S8 W20 N8 E20 $ W20 N54 $ W15 N23 $.

EXTRA FEATURES

LN	OB/XF CODE	DESCRIPTION	BLD	CAP	L	W	UNITS	UT	Adj R	ADJ UNIT PRICE	ORIG COND	YEAR ON	YEAR ACTUAL	Q	% COND	OB/XF MKT VALUE	NOTES
1	0877	JACUZZI	0	100	0	0	1.00	UT	1,000.00	1,000.00	100	2005	2005	3	24	240	
2	0825	BRICK	0	100	10	3	30.00	SF	25.00	25.00	100	2005	2005	3	96	720	
3	0810	CONCRETE A	0	100	7	5	35.00	SF	6.50	6.50	100	2005	2005	3	86	196	
4	0810	CONCRETE A	0	100	19	16	304.00	SF	6.50	6.50	100	2005	2005	3	86	1,699	
5	0810	CONCRETE A	0	100	4	7	28.00	SF	6.50	6.50	100	2005	2005	3	86	157	
6	0500	FP-PRE FAB	0	100	0	0	1.00	UT	3,500.00	3,500.00	100	2005	2005	3	89	3,115	
7	0462	ST/AL FNC	0	100	83	4	332.00	SF	10.00	10.00	100	2006	2006	3	44	1,461	
8	1100	VAC SYSTEM	0	100	0	0	1.00	UT	1,200.00	1,200.00	100	2005	2005	3	24	288	

LAND DESCRIPTION

TOTAL OB/XF 7,876

LN	USE CODE	CLS	LAND USE DESCRIPTION	CAP	RD	LOC ZONE	FRONT	DEPTH	TOT LND UTS	UNIT TYPE	DT	DPTH FACT	% COND	TOT ADJ	UNIT PRICE	ADJ UNIT PRICE	LAND VALUE	OTHER ADJUSTMENTS AND NOTES	YEAR	DENSITY	DECL	FRZ	YR	CONSRV
1	000100	C	SFR	100	0003	R-2	0.00	0.00	44.00	FF		1.00	1.00	1.00	4,000.00	4,000.00	176,000							

REVIEW DATE 05/12/2019 BY KBA Total Acres: 0.00 Total Land Value: 176,000 Market: 0 Agricultural: 0 Common: 176,000 PRINTED 08/06/2024 BY SYS