BLOCK 15 LOT 6
IN OR 1102/253
AMELIA PARK PHASE 1 UNIT 6

BROWN DOWDELL & KATHLEEN A
1524 FIELD ST
FERNANDINA BEACH, FL 32034

2024

00-00-31-102P-0015-0060

NASSAU COUNTY PROPERTY

BUILDING CHARACTERISTICS

ELEMENT	CD	CONSTRUCTION
Exterior Wall	10	ABOVE AVG 100
Roof Structur	08	IRREGULAR 100
Roof Cover	03	COMP SHNGL 100
Interior Wall	05	DRYWALL 100
Interior Floo	12	HARDWOOD 70
Interior Floo	19	MARBLE 30
Air Condition	03	CENTRAL 100
Heating Type	04	AIR DUCTED 100
Bedrooms		4 100
Bathrooms		2 100
Frame	02	WOOD FRAME 100
Stories	1.	1. 100
Units		0 100
Occupancy	00	NONE 100
Quality	03	Quality Level 03
DOR CODE	0100	SINGLE FAMILY
MAP NUM		MKT AREA 01
NEIGHBORHOOD/LOC	1031.00	

AREA TYPE	TOTAL GROSS AREA	PCT OF BASE	TOT ADJ AREA	SUBAREA MARKET VALUE
BAS	2,083	100	2,083	428,185
FDG	400	60	240	49,335
FOP	42	30	13	2,672
FOP	104	30	31	6,372
FOP	151	30	45	9,250
FOP	236	30	71	14,595
PTO	112	5	6	1,234
TOTALS	3,128		2,489	511,643

MARKET ADJUSTMENTS

TYPE	MDL	EFF. AREA	TOT ADJ PTS	EFF. BASE RATE	REPL. COST NEW	AYB	EYB	ECON	FNCT		NORM	% COND
0500	11	2,489	151.4246	227.14	565,351	2003	2003	0	0	0	9.50	90.50

1 SFR CUST – 100% - 2006 Heated Area: 2083 HX Base Yr 2006

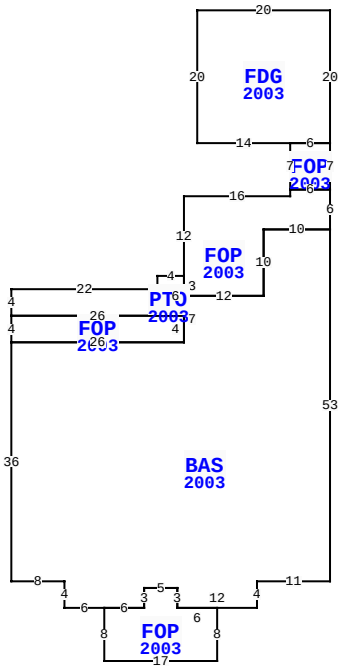

1524 FIELD ST, FERNANDINA BEACH

BLD DATE		LGL DATE	
XF DATE		LAND DATE	03/21/2024 MLU
INC DATE		AG DATE	

VALUATION SUMMARY

VALUATION BY		STANDARD
Tax Group: 2	Tax Dist:	
BUILDING MARKET VALUE		511,643
TOTAL MARKET OB/XF VALUE		19,097
TOTAL LAND VALUE - MARKET		200,000
TOTAL MARKET VALUE		730,740
SOH/AGL Deduction		382,318
ASSESSED VALUE		348,422
TOTAL EXEMPTION VALUE	HX HB	50,000
BASE TAXABLE VALUE		298,422
TOTAL JUST VALUE		730,740
NCON VALUE		0
INCOME VALUE		
PREVIOUS YEAR MKT VALUE		593,621

PERMIT NUM	DESCRIPTION	AMT	ISSUED
20110435	H/AC	2,500	03/28/2011
20033232	SWIM POOL	18,000	06/12/2003
20032521	NEW CONSTR	180,000	02/01/2003

SALES DATA

OFF RECORD Number	DATE	TYPE INST	Q U	V I	RSN CD	SALE PRICE
1102/0253	12/19/2002	WD	Q	V		59,500
GRANTOR: AMELIA PARK DEVELOPME						
GRANTEE: BROWN DOWDELL & KAT						
1102/0251	12/19/2002	WD	U	V	19	50,000
GRANTOR: AMELIA PARK DEVELOPME						
GRANTEE: BRYLEN HOMES LTD						

BUILDING NOTES

BUILDING DIMENSIONS

FDG=[YR=2003] W20 S20 E14 FOP=[YR=2003] S7 FOP=[YR=2003] S1 W16 S12 PTO=[YR=2003] W4 S2 W22 S4 FOP=[YR=2003] S4 BAS=[YR=2003] S36 E8 S4 E6 FOP=[YR=2003] S8 E17 N8 W6 N3 W5 S3 W6 $ E6 N3 E5 S3 E12 N4 E11 N53 W10 S10 W12 S7 W26 $ E26 N4 W26 $ E26 N6 $ S3 E12 N10 E10 N6 W6 $ E6 N7 W6 $ E6 N20 $.

EXTRA FEATURES

LN	OB/XF CODE	DESCRIPTION	BLD	CAP	L	W	UNITS	UT	Adj R	ADJ UNIT PRICE	ORIG COND	YEAR ON	YEAR ACTUAL	Q	% COND	OB/XF MKT VALUE	NOTES
1	0877	JACUZZI	0	100	0	0	1.00	UT	1,000.00	1,000.00	100	2003	2003	3	21	210	
2	0810	CONCRETE A	0	100	0	0	435.00	SF	6.50	6.50	100	2003	2003	3	83	2,347	
3	0810	CONCRETE A	0	100	7	4	28.00	SF	6.50	6.50	100	2003	2003	3	83	151	
4	0855	CONC PAVER	0	100	2	5	10.00	SF	15.00	15.00	100	2004	2004	3	84	126	
5	0861	POOL GUNIT	0	100	24	12	288.00	SF	85.00	85.00	100	2003	2003	3	32	7,834	
6	0845	KOOL DECK	0	100	0	0	535.00	SF	14.50	14.50	100	2003	2003	3	83	6,439	
7	0476	VF 6 SBPL	0	100	0	0	90.00	LF	32.00	32.00	100	2003	2003	3	61	1,757	
8	0470	VNYL GATE	0	100	0	0	1.00	UT	300.00	300.00	100	2003	2003	3	61	183	
9	0469	VF LATTIC	0	100	0	0	15.00	SF	5.50	5.50	100	2003	2003	3	61	50	

LAND DESCRIPTION

TOTAL OB/XF 19,097

LN	USE CODE	CLS	LAND USE DESCRIPTION	CAP	RD	LOC ZONE	FRONT	DEPTH	TOT LND UTS	UNIT TYPE	DT	DPTH FACT	% COND	TOT ADJ	UNIT PRICE	ADJ UNIT PRICE	LAND VALUE	OTHER ADJUSTMENTS AND NOTES	YEAR	DENSITY	DECL	FRZ	YR	CONSRV
1	000100	C	SFR	100		R-2	0.00	0.00	50.00	FF		1.00	1.00	1.00	4,000.00	4,000.00	200,000							

REVIEW DATE 05/12/2019 BY KBA Total Acres: 0.00 Total Land Value: 200,000 Market: 0 Agricultural: 0 Common: 200,000 PRINTED 08/06/2024 BY SYS