BLOCK 12 LOT 3
AMELIA PARK PHASE 1 UNIT 4
PB 6/265

BUNN JAMES D/LEE TRACIE L
1654 FIELD ST
FERNANDINA BEACH, FL 32034

2024

00-00-31-102P-0012-0030

NASSAU COUNTY PROPERTY

BUILDING CHARACTERISTICS

ELEMENT	CD	CONSTRUCTION
Exterior Wall	10	ABOVE AVG 100
Roof Structur	08	IRREGULAR 100
Roof Cover	03	COMP SHNGL 100
Interior Wall	05	DRYWALL 100
Interior Floo	15	HARDTILE 70
Interior Floo	14	CARPET 30
Air Condition	03	CENTRAL 100
Heating Type	04	AIR DUCTED 100
Bedrooms		3 100
Bathrooms		2.5 100
Frame	02	WOOD FRAME 100
Stories	1.	1. 100
Units		0 100
Occupancy	00	NONE 100
Quality	03	Quality Level 03
DOR CODE	0100	SINGLE FAMILY
MAP NUM		MKT AREA 01
NEIGHBORHOOD/LOC	1031.00	

AREA TYPE	TOTAL GROSS AREA	PCT OF BASE	TOT ADJ AREA	SUBAREA MARKET VALUE
BAS	2,110	100	2,110	419,413
FDG	400	60	240	47,706
FOP	112	30	34	6,759
FOP	247	30	74	14,709
PTO	424	5	21	4,174
UST	16	45	7	1,391
TOTALS	3,309		2,486	494,153

MARKET ADJUSTMENTS

TYPE	MDL	EFF. AREA	TOT ADJ PTS	EFF. BASE RATE	REPL. COST NEW	AYB	EYB	ECON	FNCT		NORM	% COND
0500	11	2,486	146.4259	219.64	546,025	2003	2003	0	0	0	9.50	90.50

1 SFR CUST – 100% - 2022 Heated Area: 2110 HX Base Yr 2022

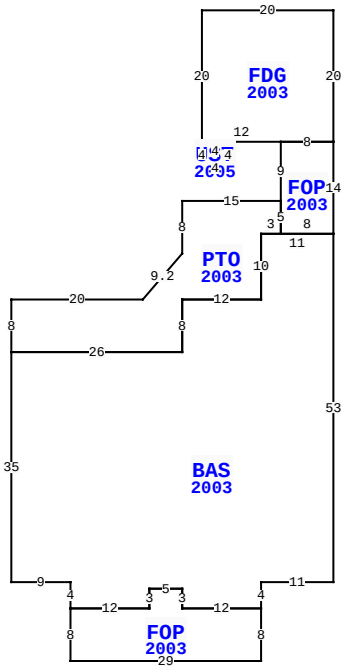

1654 FIELD ST, FERNANDINA BEACH

BLD DATE		LGL DATE	
XF DATE		LAND DATE	03/21/2024 MLU
INC DATE		AG DATE	

VALUATION SUMMARY

VALUATION BY		STANDARD
Tax Group: 2	Tax Dist:	
BUILDING MARKET VALUE		494,153
TOTAL MARKET OB/XF VALUE		24,137
TOTAL LAND VALUE - MARKET		240,000
TOTAL MARKET VALUE		758,290
SOH/AGL Deduction		146,462
ASSESSED VALUE		611,828
TOTAL EXEMPTION VALUE	HX HB	50,000
BASE TAXABLE VALUE		561,828
TOTAL JUST VALUE		758,290
NCON VALUE		0
INCOME VALUE		
PREVIOUS YEAR MKT VALUE		614,652

PERMIT NUM	DESCRIPTION	AMT	ISSUED
20051628	ELEC OTHER	1,000	04/19/2005
20051604	SWIM POOL	38,000	04/18/2005
20051535	DEMOLITION	1,000	04/08/2005
021183	NEW CONSTR	160,400	07/11/2002

SALES DATA

OFF RECORD Number	DATE	TYPE INST	Q U	V I	RSN CD	SALE PRICE
2479/0541	7/14/2021	WD	Q	I	01	760,000
GRANTOR: HITSON MARK M & MAYRA						
GRANTEE: BUNN JAMES D & TRAC						
1906/1277	3/10/2014	WD	Q	I	02	427,500
GRANTOR: HASKETT DONALD W & PA						
GRANTEE: HITSON MARK M & MAY						

BUILDING NOTES

BUILDING DIMENSIONS

FDG=[YR=2003] W20 S20 UST 2005= S4 E4 N4 W4$ E12
FOP=[YR=2003] S9 PTO=[YR=2003] W15 S8 L6 D7 W20 S8
BAS=[YR=2003] S35 E9 S4 FOP=[YR=2003] S8 E29 N8 W12 N3 W5 S3 W12$ E12 N3 E5 S3 E12 N4 E11 N53 W11 S10 W12 S8 W26$ E26 N8 E12 N10 E3 N5$ S5 E8 N14 W8$ E8 N20$.

EXTRA FEATURES

LN	OB/XF CODE	DESCRIPTION	BLD	CAP	L	W	UNITS	UT	Adj R	ADJ UNIT PRICE	ORIG COND	YEAR ON	YEAR ACTUAL	Q	% COND	OB/XF MKT VALUE	NOTES
1	0500	FP-PRE FAB	0	100	0	0	1.00	UT	3,500.00	3,500.00	100	2003	2003	3	87	3,045	
2	0877	JACUZZI	0	100	0	0	1.00	UT	1,000.00	1,000.00	100	2003	2003	3	21	210	
3	0819	CONC 12"	0	100	2	6	12.00	SF	9.50	9.50	100	2003	2003	3	83	95	
4	0810	CONCRETE A	0	100	13	3	39.00	SF	6.50	6.50	100	2003	2003	3	83	210	
5	0810	CONCRETE A	0	100	10	16	160.00	SF	6.50	6.50	100	2003	2003	3	83	863	
6	0470	VNYL GATE	0	100	0	0	2.00	UT	300.00	300.00	100	2003	2003	3	61	366	
7	0476	VF 6 SBPL	0	100	0	0	81.00	LF	32.00	32.00	100	2003	2003	3	61	1,581	
8	0469	VF LATTIC	0	100	0	0	14.00	SF	5.50	5.50	100	2004	2004	3	64	49	
9	0861	POOL GUNIT	0	100	26	15	390.00	SF	85.00	85.00	100	2005	2005	3	40	13,260	
10	0845	KOOL DECK	0	100	0	0	500.00	SF	7.25	7.25	100	2005	2005	3	86	3,118	

TOTAL OB/XF 22,797

LAND DESCRIPTION

LN	USE CODE	CLS	LAND USE DESCRIPTION	CAP	RD	LOC ZONE	FRONT	DEPTH	TOT LND UTS	UNIT TYPE	DT	DPTH FACT	% COND	TOT ADJ	UNIT PRICE	ADJ UNIT PRICE	LAND VALUE	OTHER ADJUSTMENTS AND NOTES	YEAR	DENSITY	DECL	FRZ	YR	CONSRV
1	000100	C	SFR	100		R-2	0.00	0.00	60.00	FF		1.00	1.00	1.00	4,000.00	4,000.00	240,000							

REVIEW DATE 05/12/2019 BY KBA Total Acres: 0.00 Total Land Value: 240,000 Market: 0 Agricultural: 0 Common: 240,000 PRINTED 08/06/2024 BY SYS

BLOCK 12 LOT 3
AMELIA PARK PHASE 1 UNIT 4
PB 6/265

BUNN JAMES D/LEE TRACIE L
1654 FIELD ST
FERNANDINA BEACH, FL 32034

2024

00-00-31-102P-0012-0030

NASSAU COUNTY PROPERTY

BUILDING CHARACTERISTICS

ELEMENT	CD	CONSTRUCTION

DOR CODE	0100	SINGLE FAMILY	
MAP NUM		MKT AREA	01
NEIGHBORHOOD/LOC	1031.00		

AREA TYPE	TOTAL GROSS AREA	PCT OF BASE	TOT ADJ AREA	SUBAREA MARKET VALUE
TOTALS				

MARKET ADJUSTMENTS

TYPE	MDL	EFF. AREA	TOT ADJ PTS	EFF. BASE RATE	REPL. COST NEW	AYB	EYB	ECON	FNCT		NORM	% COND

VALUATION SUMMARY

VALUATION BY		STANDARD
Tax Group: 2	Tax Dist:	
BUILDING MARKET VALUE		494,153
TOTAL MARKET OB/XF VALUE		24,137
TOTAL LAND VALUE - MARKET		240,000
TOTAL MARKET VALUE		758,290
SOH/AGL Deduction		146,462
ASSESSED VALUE		611,828
TOTAL EXEMPTION VALUE	HX HB	50,000
BASE TAXABLE VALUE		561,828
TOTAL JUST VALUE		758,290
NCON VALUE		0
INCOME VALUE		
PREVIOUS YEAR MKT VALUE		614,652

PERMIT NUM	DESCRIPTION	AMT	ISSUED

SALES DATA

OFF RECORD Number	DATE	TYPE INST	Q U /	V I /	RSN CD	SALE PRICE
2479/0541	7/14/2021	WD	Q	I	01	760,000
GRANTOR: HITSON MARK M & MAYRA						
GRANTEE: BUNN JAMES D & TRAC						
1906/1277	3/10/2014	WD	Q	I	02	427,500
GRANTOR: HASKETT DONALD W & PA						
GRANTEE: HITSON MARK M & MAY						

BLD DATE		LGL DATE	
XF DATE		LAND DATE	03/21/2024 MLU
INC DATE		AG DATE	

BUILDING NOTES

BUILDING DIMENSIONS

EXTRA FEATURES

LN	OB/XF CODE	DESCRIPTION	BLD	CAP	L	W	UNITS	UT	Adj R	ADJ UNIT PRICE	ORIG COND	YEAR ON	YEAR ACTUAL	Q	% COND	OB/XF MKT VALUE	NOTES
11	0871	POOL HTR R	0	100	0	0	1.00	UT	4,000.00	4,000.00	100	2005	2005	3	24	960	
12	0476	VF 6 SBPL	0	100	0	0	18.00	LF	32.00	32.00	100	2005	2005	3	66	380	

LAND DESCRIPTION

TOTAL OB/XF 1,340

LN	USE CODE	CLS	LAND USE DESCRIPTION	CAP	RD	LOC ZONE	FRONT	DEPTH	TOT LND UTS	UNIT TYPE	DT	DPTH FACT	% COND	TOT ADJ	UNIT PRICE	ADJ UNIT PRICE	LAND VALUE	OTHER ADJUSTMENTS AND NOTES	YEAR	DENSITY	DECL	FRZ	YR	CONSRV

REVIEW DATE 05/12/2019 BY KBA Total Acres: 0.00 Total Land Value: 240,000 Market: 0 Agricultural: 0 Common: 240,000 PRINTED 08/06/2024 BY SYS