BLOCK 9 LOT 3B
IN OR 1202/953
AMELIA PARK PHASE 1 UNIT 5

THOMPSON MARGARET
1541 GEDDES LANE
FERNANDINA BEACH, FL 32034

2024

00-00-31-102P-0009-03B0

BUILDING CHARACTERISTICS

ELEMENT	CD	CONSTRUCTION
Exterior Wall	16	WD FR STUC 70
Exterior Wall	23	REINF CONC 30
Roof Structur	08	IRREGULAR 100
Roof Cover	03	COMP SHNGL 100
Interior Wall	05	DRYWALL 100
Interior Floo	14	CARPET 70
Interior Floo	15	HARDTILE 30
Air Condition	03	CENTRAL 100
Heating Type	04	AIR DUCTED 100
Bedrooms		3 100
Bathrooms		2.5 100
Frame	02	WOOD FRAME 100
Stories	1.5	1.5 100
Units		0 100
Quality	06	Quality Level 06
DOR CODE	0100	SINGLE FAMILY
MAP NUM		MKT AREA 01
NEIGHBORHOOD/LOC	1031.00	

AREA TYPE	TOTAL GROSS AREA	PCT OF BASE	TOT ADJ AREA	SUBAREA MARKET VALUE
BAS	1,216	100	1,216	238,661
FGR	472	55	260	51,029
FOP	40	30	12	2,355
FOP	88	30	26	5,103
FST	12	55	7	1,374
FUS	1,240	100	1,240	243,372
TOTALS	3,068		2,761	541,894

MARKET ADJUSTMENTS

TYPE	MDL	EFF. AREA	TOT ADJ PTS	EFF. BASE RATE	REPL. COST NEW	AYB	EYB	ECON	FNCT		NORM	% COND
0320	12	2,761	228.2880	216.87	598,778	2004	2004	0	0	0	9.50	90.50

1 TOWNHOUSE – 100% - 2005 Heated Area: 2456 HX Base Yr 2005

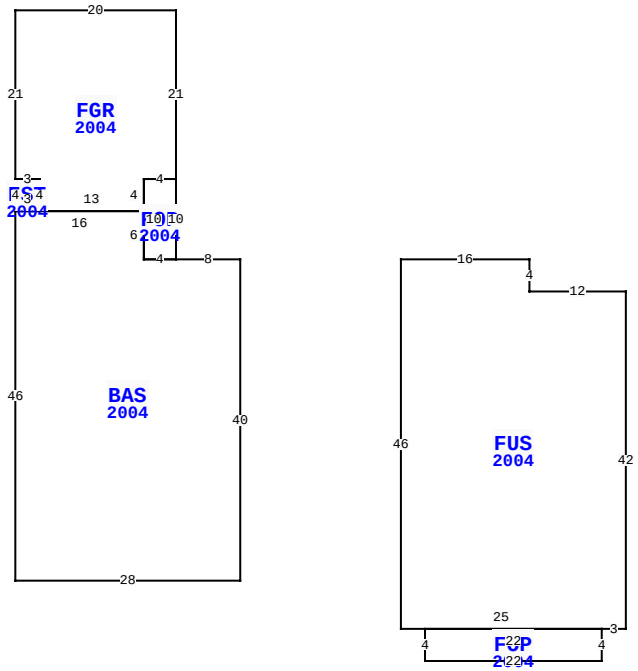

BLD DATE		LGL DATE	
XF DATE		LAND DATE	03/21/2024 MLU
INC DATE		AG DATE	

1541 GEDDES LN, FERNANDINA BEACH

NASSAU COUNTY PROPERTY

PAGE 1 of 1 2

VALUATION SUMMARY

VALUATION BY		STANDARD
Tax Group: 2	Tax Dist:	
BUILDING MARKET VALUE		541,894
TOTAL MARKET OB/XF VALUE		10,776
TOTAL LAND VALUE - MARKET		112,000
TOTAL MARKET VALUE		664,670
SOH/AGL Deduction		377,427
ASSESSED VALUE		287,243
TOTAL EXEMPTION VALUE	HX HB SX WX	105,000
BASE TAXABLE VALUE		182,243
TOTAL JUST VALUE		664,670
NCON VALUE		0
INCOME VALUE		
PREVIOUS YEAR MKT VALUE		639,858

PERMIT NUM	DESCRIPTION	AMT	ISSUED
20080877	OTHER	103	05/23/2008
20042404	OTHER	2,000	12/21/2004
20040504	NEW CONSTR	126,000	03/16/2004

SALES DATA

OFF RECORD Number	DATE	TYPE INST	Q U	V I	RSN CD	SALE PRICE
1202/0953	1/20/2004	WD	U	V	21	32,000
GRANTOR: BRYLEN HOMES LTD						
GRANTEE: THOMPSON PAUL F & M						
1131/1187	4/23/2003	WD	U	V	07	100
GRANTOR: AMELIA PARK DEVELOPME						
GRANTEE: BRYLEN HOMES LTD						

BUILDING NOTES

BUILDING DIMENSIONS

BAS=[YR=2004] W8 FOP=[YR=2004] N10 FGR=[YR=2004] N21 W20 S21 FST=[YR=2004] S4 E3 N4 W3$ E3 S4 E13 N4 E4$ W4 S10 E4$ W4 N6 W16 S46 E28 N40$ PTR=E20 FUS=[YR=2004] E16 S4 E12 S42 W3 FOP=[YR=2004] S4 W22 N4 E22$ W25 N46$ W20$.

EXTRA FEATURES

LN	OB/XF CODE	DESCRIPTION	BLD	CAP	L	W	UNITS	UT	Adj R	ADJ UNIT PRICE	ORIG COND	YEAR ON	YEAR ACTUAL	Q	% COND	OB/XF MKT VALUE	NOTES
1	0500	FP-PRE FAB	0	100	0	0	1.00	UT	3,500.00	3,500.00	100	2004	2004	3	88	3,080	
2	1131	REINFR 8	0	100	36	3	108.00	SF	11.03	11.03	100	2004	2004	3	96	1,143	
3	0855	CONC PAVER	0	100	0	0	315.00	SF	10.00	10.00	100	2004	2004	3	84	2,646	
4	0855	CONC PAVER	0	100	0	0	153.00	SF	10.00	10.00	100	2004	2004	3	84	1,285	
5	0810	CONCRETE A	0	100	10	3	30.00	SF	6.50	6.50	100	2004	2004	3	84	164	
6	0810	CONCRETE A	0	100	24	17	408.00	SF	6.50	6.50	100	2004	2004	3	84	2,228	
7	0470	VNYL GATE	0	100	0	0	1.00	UT	300.00	300.00	100	2004	2004	3	64	192	
8	0478	VF 6 SLAT	0	100	0	0	4.00	LF	15.00	15.00	100	2004	2004	3	64	38	

LAND DESCRIPTION

TOTAL OB/XF 10,776

LN	USE CODE	CLS	LAND USE DESCRIPTION	CAP	RD	LOC ZONE	FRONT	DEPTH	TOT LND UTS	UNIT TYPE	DT	DPTH FACT	% COND	TOT ADJ	UNIT PRICE	ADJ UNIT PRICE	LAND VALUE	OTHER ADJUSTMENTS AND NOTES	YEAR	DENSITY	DECL	FRZ	YR	CONSRV
1	000100	C	SFR	100		R-2	0.00	0.00	28.00	FF		1.00	1.00	1.00	4,000.00	4,000.00	112,000							

REVIEW DATE 05/12/2019 BY KBA Total Acres: 0.00 Total Land Value: 112,000 Market: 0 Agricultural: 0 Common: 112,000 PRINTED 08/06/2024 BY SYS