BLOCK 6 LOT 5
IN OR 2126/1103
AMELIA PARK PHASE 1 UNIT 1

KELLY KATHRYN E
PO BOX 17199
FERNANDINA BEACH, FL 32035

**2024**

**00-00-31-102P-0006-0050**

## BUILDING CHARACTERISTICS

| ELEMENT | CD | CONSTRUCTION |
|---|---|---|
| Exterior Wall | 10 | ABOVE AVG 100 |
| Roof Structur | 08 | IRREGULAR 100 |
| Roof Cover | 03 | COMP SHNGL 100 |
| Interior Wall | 05 | DRYWALL 100 |
| Interior Floo | 12 | HARDWOOD 70 |
| Interior Floo | 15 | HARDTILE 30 |
| Air Condition | 03 | CENTRAL 100 |
| Heating Type | 04 | AIR DUCTED 100 |
| Bedrooms | | 3 100 |
| Bathrooms | | 2.5 100 |
| Frame | 02 | WOOD FRAME 100 |
| Stories | 1. | 1. 100 |
| Units | | 0 100 |
| Occupancy | 00 | NONE 100 |
| Quality | 03 | Quality Level 03 |
| DOR CODE | 0100 | SINGLE FAMILY |
| MAP NUM | | MKT AREA 01 |
| NEIGHBORHOOD/LOC | 1031.00 | |

| AREA TYPE | TOTAL GROSS AREA | PCT OF BASE | TOT ADJ AREA | SUBAREA MARKET VALUE |
|---|---|---|---|---|
| BAS | 2,314 | 100 | 2,314 | 467,007 |
| FGR | 401 | 55 | 221 | 44,602 |
| FOP | 90 | 30 | 27 | 5,449 |
| FOP | 121 | 30 | 36 | 7,265 |
| FOP | 174 | 30 | 52 | 10,494 |
| PTO | 56 | 5 | 3 | 605 |
| TOTALS | 3,156 | | 2,653 | 535,423 |

## MARKET ADJUSTMENTS

| TYPE | MDL | EFF. AREA | TOT ADJ PTS | EFF. BASE RATE | REPL. COST NEW | AYB | EYB | ECON | FNCT | | NORM | % COND |
|---|---|---|---|---|---|---|---|---|---|---|---|---|
| 0500 | 11 | 2,653 | 143.1341 | 214.70 | 569,599 | 2001 | 2010 | 0 | 0 | 0 | 6.00 | 94.00 |

1 SFR CUST – 100% - 2018 Heated Area: 2314 HX Base Yr 2018

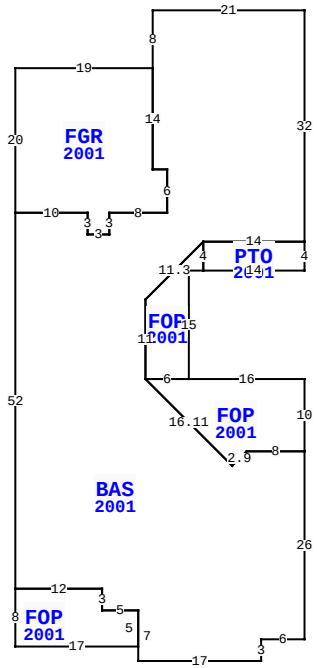


1881 GARDENIA ST, FERNANDINA BEACH

| | | | |
|---|---|---|---|
| BLD DATE | | LGL DATE | |
| XF DATE | | LAND DATE | 03/21/2024 MLU |
| INC DATE | | AG DATE | |

## NASSAU COUNTY PROPERTY

PAGE 1 of 1 2

### VALUATION SUMMARY

| | | |
|---|---|---|
| VALUATION BY | | STANDARD |
| Tax Group: 2 | Tax Dist: | |
| BUILDING MARKET VALUE | | 535,423 |
| TOTAL MARKET OB/XF VALUE | | 7,296 |
| TOTAL LAND VALUE - MARKET | | 200,000 |
| TOTAL MARKET VALUE | | 742,719 |
| SOH/AGL Deduction | | 280,225 |
| ASSESSED VALUE | | 462,494 |
| TOTAL EXEMPTION VALUE | HX HB | 50,000 |
| BASE TAXABLE VALUE | | 412,494 |
| TOTAL JUST VALUE | | 742,719 |
| NCON VALUE | | 0 |
| INCOME VALUE | | |
| PREVIOUS YEAR MKT VALUE | | 600,316 |

| PERMIT NUM | DESCRIPTION | AMT | ISSUED |
|---|---|---|---|
| 20181259 | INTREM | 450,000 | 04/17/2018 |
| 20100260 | H/AC | 3,500 | 02/08/2010 |
| 2003650 | NEW CONSTR | 149,000 | 08/08/2000 |

## SALES DATA

| OFF RECORD Number | DATE | TYPE INST | Q U | V I | RSN CD | SALE PRICE |
|---|---|---|---|---|---|---|
| 2126/1103 | 6/14/2017 | WD | Q | I | 01 | 513,000 |
| GRANTOR: JACKSON JAMES RONALD | | | | | | |
| GRANTEE: KELLY KATHRYN E | | | | | | |
| 1999/1115 | 8/21/2015 | WD | Q | I | 02 | 408,900 |
| GRANTOR: MAGNUSON JOANN E TRUS | | | | | | |
| GRANTEE: JACKSON JAMES RONAL | | | | | | |

## BUILDING NOTES

## BUILDING DIMENSIONS

BAS=[YR=2001] W21 S8 FGR=[YR=2001] W19 S20 E10 S3 E3 N3 E8 N6 W2 N14 $ S14 E2 S6 W8 S3 W3 N3 W10 S52 FOP=[YR=2001] S8 E17 N5 W5 N3 W12 $ E12 S3 E5 S7 E17 N3 E6 N26 FOP=[YR=2001] N10 W16 FOP=[YR=2001] N15 E2 PTO=[YR=2001] E14N4W14S4$ N4 L8 D8 S11E6$W6 D12 R12 U2 R2 E8$ W8 D2 L2 L12 U12 N11 U8 R8 E14 N32$.

## EXTRA FEATURES

| LN | OB/XF CODE | DESCRIPTION | BLD | CAP | L | W | UNITS | UT | Adj R | ADJ UNIT PRICE | ORIG COND | YEAR ON | YEAR ACTUAL | Q | % COND | OB/XF MKT VALUE | NOTES |
|---|---|---|---|---|---|---|---|---|---|---|---|---|---|---|---|---|---|
| 1 | 0500 | FP-PRE FAB | 0 | 100 | 0 | 0 | 1.00 | UT | 3,500.00 | 3,500.00 | 100 | 2001 | 2001 | 3 | 85 | 2,975 | |
| 2 | 0877 | JACUZZI | 0 | 100 | 0 | 0 | 1.00 | UT | 1,000.00 | 1,000.00 | 100 | 2001 | 2001 | 3 | 20 | 200 | |
| 3 | 0810 | CONCRETE A | 0 | 100 | 23 | 18 | 414.00 | SF | 6.50 | 6.50 | 100 | 2001 | 2001 | 3 | 80 | 2,153 | |
| 4 | 0810 | CONCRETE A | 0 | 100 | 13 | 3 | 39.00 | SF | 6.50 | 6.50 | 100 | 2001 | 2001 | 3 | 80 | 203 | |
| 5 | 0810 | CONCRETE A | 0 | 100 | 32 | 3 | 96.00 | SF | 6.50 | 6.50 | 100 | 2001 | 2001 | 3 | 80 | 499 | |
| 6 | 0819 | CONC 12" | 0 | 100 | 5 | 4 | 20.00 | SF | 9.50 | 9.50 | 100 | 2001 | 2001 | 3 | 80 | 152 | |
| 7 | 0819 | CONC 12" | 0 | 100 | 6 | 4 | 24.00 | SF | 9.50 | 9.50 | 100 | 2001 | 2001 | 3 | 80 | 182 | |
| 8 | 0910 | SCRN RM L | 0 | 100 | 18 | 16 | 288.00 | SF | 15.00 | 15.00 | 100 | 2001 | 2001 | 3 | 20 | 864 | |
| 9 | 0819 | CONC 12" | 0 | 100 | 3 | 3 | 9.00 | SF | 9.50 | 9.50 | 100 | 2001 | 2001 | 3 | 80 | 68 | |

## LAND DESCRIPTION

TOTAL OB/XF 7,296

| LN | USE CODE | CLS | LAND USE DESCRIPTION | CAP | RD | LOC ZONE | FRONT | DEPTH | TOT LND UTS | UNIT TYPE | DT | DPTH FACT | % COND | TOT ADJ | UNIT PRICE | ADJ UNIT PRICE | LAND VALUE | OTHER ADJUSTMENTS AND NOTES | YEAR | DENSITY | DECL | FRZ | YR | CONSRV |
|---|---|---|---|---|---|---|---|---|---|---|---|---|---|---|---|---|---|---|---|---|---|---|---|---|
| 1 | 000100 | C | SFR | 100 | | R-2 | 0.00 | 0.00 | 50.00 | FF | | 1.00 | 1.00 | 1.00 | 4,000.00 | 4,000.00 | 200,000 | | | | | | | |

REVIEW DATE 05/12/2019 BY KBA Total Acres: 0.00 Total Land Value: 200,000 Market: 0 Agricultural: 0 Common: 200,000 PRINTED 08/06/2024 BY SYS