BLOCK 5 LOT 1F
AMELIA PARK PHASE 1 UNIT 1
PB 6/114-115

PUFAHL JOHN P/TIERNEY LINDA A
1645 PARK AVENUE
FERNANDINA BEACH, FL 32034

2024

00-00-31-102P-0005-01F0

BUILDING CHARACTERISTICS

ELEMENT	CD	CONSTRUCTION
Exterior Wall	16	WD FR STUC 100
Roof Structur	03	GABLE/HIP 100
Roof Cover	03	COMP SHNGL 100
Interior Wall	05	DRYWALL 100
Interior Floo	14	CARPET 70
Interior Floo	11	CLAY TILE 30
Air Condition	03	CENTRAL 100
Heating Type	04	AIR DUCTED 100
Bedrooms		4 100
Bathrooms		3.5 100
Frame	02	WOOD FRAME 100
Stories	1.5	1.5 100
Units		0 100
Quality	06	Quality Level 06
DOR CODE	0100	SINGLE FAMILY
MAP NUM		MKT AREA 01
NEIGHBORHOOD/LOC	1031.00	

AREA TYPE	TOTAL GROSS AREA	PCT OF BASE	TOT ADJ AREA	SUBAREA MARKET VALUE
APT	630	100	630	114,422
FOP	65	30	20	3,632
HXB	717	100	717	130,223
HXB	1,237	100	1,237	224,667
HXG	652	55	359	65,202
HXP	132	30	40	7,265
HXP	335	30	100	18,162
HXU	65	55	36	6,539
TOTALS	3,833		3,139	570,113

MARKET ADJUSTMENTS

TYPE	MDL	EFF. AREA	TOT ADJ PTS	EFF. BASE RATE	REPL. COST NEW	AYB	EYB	ECON	FNCT		NORM	% COND
0320	12	3,139	214.8154	204.07	640,576	2001	2001	0	0	0	11.00	89.00

1 TOWNHOUSE - 79.29% - 2023 Heated Area: 2584 HX Base Yr 2023

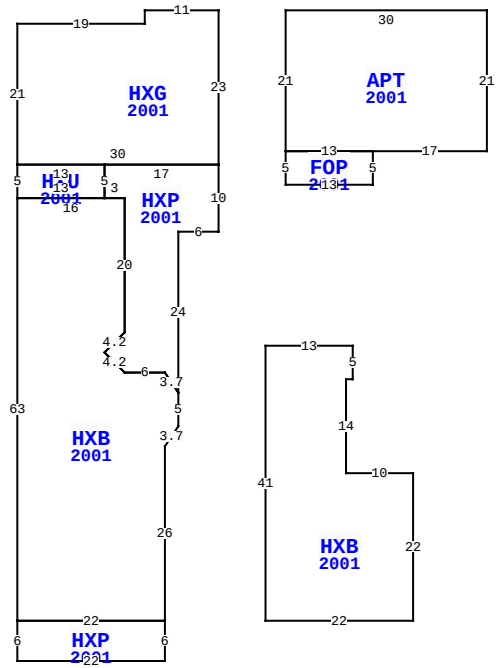

1645 PARK AVE, FERNANDINA BEACH

BLD DATE		LGL DATE	
XF DATE		LAND DATE	03/21/2024 MLU
INC DATE		AG DATE	

NASSAU COUNTY PROPERTY

PAGE 1 of 1 2

VALUATION SUMMARY

VALUATION BY		STANDARD
Tax Group: 2	Tax Dist:	
BUILDING MARKET VALUE		570,113
TOTAL MARKET OB/XF VALUE		3,007
TOTAL LAND VALUE - MARKET		88,000
TOTAL MARKET VALUE		661,120
SOH/AGL Deduction		3,678
ASSESSED VALUE		657,442
TOTAL EXEMPTION VALUE	HX HB	50,000
BASE TAXABLE VALUE		607,442
TOTAL JUST VALUE		661,120
NCON VALUE		0
INCOME VALUE		
PREVIOUS YEAR MKT VALUE		642,396

PERMIT NUM	DESCRIPTION	AMT	ISSUED
20121526	H/AC	3,000	07/27/2012
2003652	NEW CONSTR	162,000	08/08/2000
2003653	NEW CONSTR	41,000	08/08/2000

SALES DATA

OFF RECORD Number	DATE	TYPE INST	Q U	V I	RSN CD	SALE PRICE
2530/1029	1/06/2022	WD	Q	I	01	730,000
GRANTOR: PALMER CARL & MARY AN						
GRANTEE: PUFAHL JOHN P & LIN						
1376/0569	12/22/2005	WD	Q	I		495,000
GRANTOR: MCCLELLAN JOHN P & ST						
GRANTEE: PALMER CARL & MARY						

BUILDING NOTES

BUILDING DIMENSIONS

HXG=[YR=2001] W11 S2 W19 S21 HXU=[YR=2001] S5 HXB=[YR=2001] S63 HXP=[YR=2001] S6 E22 N6 W22 $ E22 N26 U3 R2 N5 HXP=[YR=2001] N24 E6 N10 W17 S5 E3 S20 L3 D3 D3 R3 E6 D3 R2 $ L2 U3 W6 U3 L3 U3 R3 N20 W16 $ E13 N5 W13 $ E30 N23 $ PTR= E10 APT=[YR=2001] E30 S21 W17 FOP=[YR=2001] S5 W13 N5 E13 $ W13 N21 $ W10 $ PTR= E20 S50 HXB=[YR=2001] S5 W1 S14 E10 S22 W22 N41 E13 $ N50 W20 $.

EXTRA FEATURES

LN	OB/XF CODE	DESCRIPTION	BLD	CAP	L	W	UNITS	UT	Adj R	ADJ UNIT PRICE	ORIG COND	YEAR ON	YEAR ACTUAL	Q	% COND	OB/XF MKT VALUE	NOTES
1	0819	CONC 12"	0	100	3	11	33.00	SF	9.50	9.50	100	2001	2001	3	80	251	
2	0819	CONC 12"	0	100	2	5	10.00	SF	9.50	9.50	100	2001	2001	3	80	76	
3	0810	CONCRETE A	0	100	5	11	55.00	SF	6.50	6.50	100	2001	2001	3	80	286	
4	0810	CONCRETE A	0	100	12	4	48.00	SF	6.50	6.50	100	2001	2001	3	80	250	
5	0810	CONCRETE A	0	100	0	0	325.00	SF	6.50	6.50	100	2001	2001	3	80	1,690	
6	1241	WD DECK G	0	100	5	4	20.00	UT	11.50	11.50	100	2001	2001	3	29	67	
7	0450	PREFAB FNC	0	100	0	0	50.00	LF	8.00	8.00	100	2001	2001	3	20	80	
8	1126	CB/STC 8"	0	100	24	2	48.00	SF	8.00	8.00	100	2001	2001	3	80	307	

LAND DESCRIPTION

TOTAL OB/XF 3,007

LN	USE CODE	CLS	LAND USE DESCRIPTION	CAP	RD	LOC ZONE	FRONT	DEPTH	TOT LND UTS	UNIT TYPE	DT	DPTH FACT	% COND	TOT ADJ	UNIT PRICE	ADJ UNIT PRICE	LAND VALUE	OTHER ADJUSTMENTS AND NOTES	YEAR	DENSITY	DECL	FRZ	YR	CONSRV
1	000100	C	SFR	100		R-2	0.00	0.00	22.00	FF		1.00	1.00	1.00	4,000.00	4,000.00	88,000							

REVIEW DATE 05/12/2019 BY KBA Total Acres: 0.00 Total Land Value: 88,000 Market: 0 Agricultural: 0 Common: 88,000 PRINTED 08/06/2024 BY SYS