BLOCK 4 LOT 2
IN OR 1965/1819
AMELIA PARK PHASE 1 UNIT 1

THOMAS JANETT
1707 PARK AV
FERNANDINA BEACH, FL 32034

2024

00-00-31-102P-0004-0020

BUILDING CHARACTERISTICS

ELEMENT	CD	CONSTRUCTION
Exterior Wall	10	ABOVE AVG 100
Roof Structur	08	IRREGULAR 100
Roof Cover	03	COMP SHNGL 100
Interior Wall	05	DRYWALL 100
Interior Floo	15	HARDTILE 80
Interior Floo	12	HARDWOOD 20
Air Condition	03	CENTRAL 100
Heating Type	04	AIR DUCTED 100
Bedrooms		3 100
Bathrooms		2.5 100
Frame	02	WOOD FRAME 100
Stories	1.	1. 100
Units		0 100
Occupancy	00	NONE 100
Quality	03	Quality Level 03
DOR CODE	0100	SINGLE FAMILY
MAP NUM		MKT AREA 01
NEIGHBORHOOD/LOC	1031.00	

AREA TYPE	TOTAL GROSS AREA	PCT OF BASE	TOT ADJ AREA	SUBAREA MARKET VALUE
BAS	2,307	100	2,307	463,541
FGR	408	55	224	45,007
FOP	86	30	26	5,225
FOP	155	30	46	9,243
FOP	174	30	52	10,448
PTO	60	5	3	603
TOTALS	3,190		2,658	534,067

MARKET ADJUSTMENTS

TYPE	MDL	EFF. AREA	TOT ADJ PTS	EFF. BASE RATE	REPL. COST NEW	AYB	EYB	ECON	FNCT		NORM	% COND
0500	11	2,658	148.0109	222.02	590,129	2003	2003	0	0	0	9.50	90.50

1 SFR CUST – 100% - 2016 Heated Area: 2307 HX Base Yr 2016

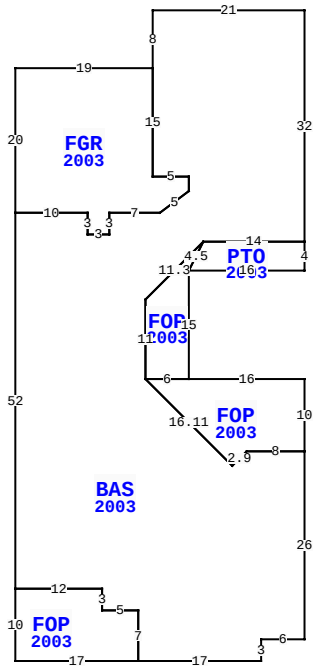

1707 PARK AVE, FERNANDINA BEACH

BLD DATE		LGL DATE	
XF DATE		LAND DATE	03/21/2024 MLU
INC DATE		AG DATE	

NASSAU COUNTY PROPERTY

PAGE 1 of 1 2

VALUATION SUMMARY

VALUATION BY		STANDARD
Tax Group: 2	Tax Dist:	
BUILDING MARKET VALUE		534,067
TOTAL MARKET OB/XF VALUE		7,389
TOTAL LAND VALUE - MARKET		260,000
TOTAL MARKET VALUE		801,456
SOH/AGL Deduction		421,839
ASSESSED VALUE		379,617
TOTAL EXEMPTION VALUE	HX HB WX	55,000
BASE TAXABLE VALUE		324,617
TOTAL JUST VALUE		801,456
NCON VALUE		0
INCOME VALUE		
PREVIOUS YEAR MKT VALUE		644,382

PERMIT NUM	DESCRIPTION	AMT	ISSUED
20030000	XFOB	3,000	09/03/2003
20032438	NEW CONSTR	180,000	01/30/2003

SALES DATA

OFF RECORD Number	DATE	TYPE INST	Q U	V I	RSN CD	SALE PRICE
1965/1819	3/02/2015	WD	Q	I	01	487,500
GRANTOR: STROBEL WILLIAM D & S						
GRANTEE: THOMAS JANETT						
1721/1541	1/06/2011	WD	U	I	30	100
GRANTOR: STROBEL WILLIAM D & S						
GRANTEE: STROBEL WM D & SARA						

BUILDING NOTES

BUILDING DIMENSIONS

BAS=[YR=2003] W21 S8 FGR=[YR=2003] W19 S20 E10 S3 E3 N3 E7 U3 R4 N2W5 N15$ S15E5S2 L4 D3 W7 S3 W3 N3 W10 S52 FOP=[YR=2003] S10 E17 N7 W5 N3 W12$ E12 S3 E5 S7 E17 N3 E6 N26 FOP=[YR=2003] N10 W16 FOP=[YR=2003] N15 PTO=[YR=2003] E16N4W14 L2 D4 $ R2 U4 L8 D8 S11E6$ W6 D12 R12 U2 R2 E8$ W8 D2 L2 L12 U12 N11 U8 R8 E14N32$.

EXTRA FEATURES

LN	OB/XF CODE	DESCRIPTION	BLD	CAP	L	W	UNITS	UT	Adj R	ADJ UNIT PRICE	ORIG COND	YEAR ON	YEAR ACTUAL	Q	% COND	OB/XF MKT VALUE	NOTES
1	0855	CONC PAVER	0	100	0	0	114.00	SF	15.00	15.00	100	2003	2003	3	83	1,419	
2	0855	CONC PAVER	0	100	11	3	33.00	SF	15.00	15.00	100	2003	2003	3	83	411	
3	0810	CONCRETE A	0	100	21	4	84.00	SF	6.50	6.50	100	2003	2003	3	83	453	
4	0810	CONCRETE A	0	100	0	0	730.00	SF	6.50	6.50	100	2003	2003	3	83	3,938	
5	1100	VAC SYSTEM	0	100	0	0	1.00	UT	1,000.00	1,000.00	100	2003	2003	3	21	210	
6	0910	SCRN RM L	0	100	16	19	304.00	SF	15.00	15.00	100	2003	2003	3	21	958	
7	0885	WATERSCAPE	0	100	0	0	1.00	UT	0.00	0.00	100	2003	2003	3	100	0	

LAND DESCRIPTION

TOTAL OB/XF 7,389

LN	USE CODE	CLS	LAND USE DESCRIPTION	CAP	RD	LOC ZONE	FRONT	DEPTH	TOT LND UTS	UNIT TYPE	DT	DPTH FACT	% COND	TOT ADJ	UNIT PRICE	ADJ UNIT PRICE	LAND VALUE	OTHER ADJUSTMENTS AND NOTES	YEAR	DENSITY	DECL	FRZ	YR	CONSRV
1	000100	C	SFR	100		R-2	0.00	0.00	65.00	FF		1.00	1.00	1.00	4,000.00	4,000.00	260,000							

REVIEW DATE 05/12/2019 BY KBA Total Acres: 0.00 Total Land Value: 260,000 Market: 0 Agricultural: 0 Common: 260,000 PRINTED 08/06/2024 BY SYS