BLOCK 1 LOT 12
IN OR 1168/1033
AMELIA PARK PHASE 1 UNIT 1

BULLEN DAVID R & NANCY E
1704 MCARTHUR ST
FERNANDINA BEACH, FL 32034-1912

2024

00-00-31-102P-0001-0120

NASSAU COUNTY PROPERTY

BUILDING CHARACTERISTICS

ELEMENT	CD	CONSTRUCTION
Exterior Wall	10	ABOVE AVG 100
Roof Structur	08	IRREGULAR 100
Roof Cover	03	COMP SHNGL 100
Interior Wall	05	DRYWALL 100
Interior Floo	14	CARPET 70
Interior Floo	15	HARDTILE 30
Air Condition	03	CENTRAL 100
Heating Type	04	AIR DUCTED 100
Bedrooms		3 100
Bathrooms		2.5 100
Frame	02	WOOD FRAME 100
Stories	1.5	1.5 100
Units		0 100
Occupancy	00	NONE 100
Quality	03	Quality Level 03
DOR CODE	0100	SINGLE FAMILY
MAP NUM		MKT AREA 01
NEIGHBORHOOD/LOC	1031.00	

AREA TYPE	TOTAL GROSS AREA	PCT OF BASE	TOT ADJ AREA	SUBAREA MARKET VALUE
BAS	1,456	100	1,456	272,295
FDG	441	60	265	49,559
FOP	168	30	50	9,351
FOP	180	30	54	10,099
FUS	654	100	654	122,308
TOTALS	2,899		2,479	463,612

MARKET ADJUSTMENTS

TYPE	MDL	EFF. AREA	TOT ADJ PTS	EFF. BASE RATE	REPL. COST NEW	AYB	EYB	ECON	FNCT		NORM	% COND
0500	11	2,479	140.0861	210.13	520,912	2000	2000	0	0	0	11.00	89.00

1 SFR CUST – 100% - 2007 Heated Area: 2110 HX Base Yr 2007

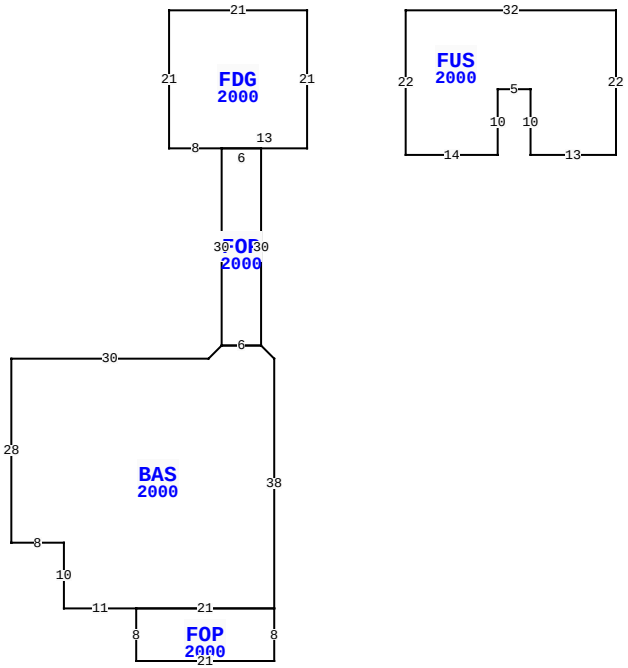

1704 MCARTHUR ST, FERNANDINA BEACH

BLD DATE		LGL DATE	
XF DATE		LAND DATE	03/21/2024 MLU
INC DATE		AG DATE	

NASSAU COUNTY PROPERTY — VALUATION SUMMARY

VALUATION BY		STANDARD
Tax Group: 2	Tax Dist:	
BUILDING MARKET VALUE		463,612
TOTAL MARKET OB/XF VALUE		6,339
TOTAL LAND VALUE - MARKET		200,000
TOTAL MARKET VALUE		669,951
SOH/AGL Deduction		358,560
ASSESSED VALUE		311,391
TOTAL EXEMPTION VALUE	HX HB VX	55,000
BASE TAXABLE VALUE		256,391
TOTAL JUST VALUE		669,951
NCON VALUE		0
INCOME VALUE		
PREVIOUS YEAR MKT VALUE		540,031

PERMIT NUM	DESCRIPTION	AMT	ISSUED
20121588	REPLACE GAS LINE	250	08/06/2012
20121572	REPLACE GAS WTR H	1,200	08/03/2012
990130	NEW CONSTR	157,000	03/05/1999

SALES DATA

OFF RECORD Number	DATE	TYPE INST	Q / U	V / I	RSN CD	SALE PRICE
1168/1033	9/05/2003	WD	Q	I		315,000
GRANTOR: PIERCE RANDALL L & SH						
GRANTEE: BULLEN DAVID R & NA						
0946/1724	8/25/2000	WD	U	I		264,900
GRANTOR: BRYLEN HOMES LTD						
GRANTEE: PIERCE RANDALL L &						

BUILDING NOTES

BUILDING DIMENSIONS

FDG=[YR=2000] W21 S21 E8 FOP=[YR=2000] S30 BAS=[YR=2000] L2 D2 W30 S28 E8 S10 E11 FOP=[YR=2000] S8 E21 N8 W21 $ E21 N38 L2 U2 W6 $ E6 N30 W6 $ E13 N21 $ PTR= E15 FUS=[YR=2000] E32 S22 W13 N10 W5 S10 W14 N22 $ W15 $.

EXTRA FEATURES

LN	OB/XF CODE	DESCRIPTION	BLD	CAP	L	W	UNITS	UT	Adj R	ADJ UNIT PRICE	ORIG COND	YEAR ON	YEAR ACTUAL	Q	% COND	OB/XF MKT VALUE	NOTES
1	0500	FP-PRE FAB	0	100	0	0	1.00	UT	3,500.00	3,500.00	100	2000	2000	3	84	2,940	
2	0810	CONCRETE A	0	100	14	3	42.00	SF	6.50	6.50	100	2000	2000	3	79	216	
3	0810	CONCRETE A	0	100	0	0	610.00	SF	6.50	6.50	100	2000	2000	3	79	3,132	
4	0810	CONCRETE A	0	100	1	10	10.00	SF	6.50	6.50	100	2000	2000	3	79	51	

LAND DESCRIPTION

TOTAL OB/XF 6,339

LN	USE CODE	CLS	LAND USE DESCRIPTION	CAP	RD	LOC ZONE	FRONT	DEPTH	TOT LND UTS	UNIT TYPE	DT	DPTH FACT	% COND	TOT ADJ	UNIT PRICE	ADJ UNIT PRICE	LAND VALUE	OTHER ADJUSTMENTS AND NOTES	YEAR	DENSITY	DECL	FRZ	YR	CONSRV
1	000100	C	SFR	100		R-2	0.00	0.00	50.00	FF		1.00	1.00	1.00	4,000.00	4,000.00	200,000							

REVIEW DATE 05/12/2019 BY KBA Total Acres: 0.00 Total Land Value: 200,000 Market: 0 Agricultural: 0 Common: 200,000 PRINTED 08/06/2024 BY SYS