LOT C1
AMELIA PARK LAKESIDE
OR 2293/1551

MEYERS ANTHONY M REV TRUST/MEYERS ANTHONY M TRUSTE
1544 LAKEVIEW LN
FERNANDINA BEACH, FL 32034

2024

00-00-31-102L-00C1-0000

BUILDING CHARACTERISTICS

ELEMENT	CD	CONSTRUCTION
Exterior Wall	31	HARDIE BRD 100
Roof Structur	03	GABLE/HIP 100
Roof Cover	03	COMP SHNGL 100
Interior Wall	05	DRYWALL 100
Interior Floo	13	LVT/LAMNT 100
Air Condition	03	CENTRAL 100
Heating Type	04	AIR DUCTED 100
Bedrooms		4 100
Bathrooms		3 100
Frame	02	WOOD FRAME 100
Stories	1.5	1.5 100
Units		0 100
Quality	03	Quality Level 03

DOR CODE 0100 SINGLE FAMILY
MAP NUM | MKT AREA 01
NEIGHBORHOOD/LOC 1031.00

AREA TYPE	TOTAL GROSS AREA	PCT OF BASE	TOT ADJ AREA	SUBAREA MARKET VALUE
BAS	1,939	100	1,939	397,165
FGR	462	55	254	52,027
FOP	170	30	51	10,446
FOP	248	30	74	15,157
FUS	315	100	315	64,521
PTO	415	5	21	4,301
STR	60	10	6	1,229
TOTALS	3,609		2,660	544,848

MARKET ADJUSTMENTS

TYPE	MDL	EFF. AREA	TOT ADJ PTS	EFF. BASE RATE	REPL. COST NEW	AYB	EYB	ECON	FNCT		NORM	% COND
0500	11	2,660	136.5504	204.83	544,848	2022	2022	0	0	0	0.00	100.00

1 SFR CUST – 100% - 2024 Heated Area: 2254 HX Base Yr 2024

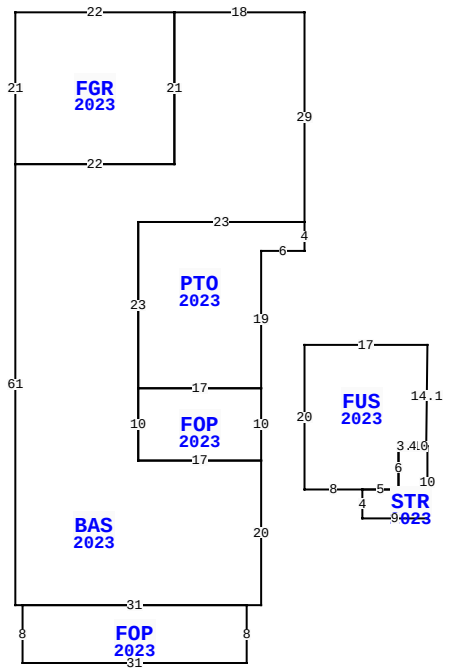

1544 LAKEVIEW LN, FERNANDINA BEACH

BLD DATE		LGL DATE	
XF DATE		LAND DATE	
INC DATE		AG DATE	

NASSAU COUNTY PROPERTY

PAGE 1 of 1 2

VALUATION SUMMARY

VALUATION BY		STANDARD
Tax Group: 2	Tax Dist:	
BUILDING MARKET VALUE		544,848
TOTAL MARKET OB/XF VALUE		3,120
TOTAL LAND VALUE - MARKET		240,000
TOTAL MARKET VALUE		787,968
SOH/AGL Deduction		0
ASSESSED VALUE		787,968
TOTAL EXEMPTION VALUE	HX HB	50,000
BASE TAXABLE VALUE		737,968
TOTAL JUST VALUE		787,968
NCON VALUE		0
INCOME VALUE		
PREVIOUS YEAR MKT VALUE		691,436

PERMIT NUM	DESCRIPTION	AMT	ISSUED
20211187	3196T 1933H 462G	337,147	05/11/2021

SALES DATA

OFF RECORD Number	DATE	TYPE INST	Q / U	V / I	RSN CD	SALE PRICE
2437/0779	2/26/2021	WD	Q	V	01	290,000
GRANTOR: GLEASON LISA M & MARK						
GRANTEE: MEYERS ANTHONY M RE						
2302/1039	8/26/2019	SW	Q	V	01	160,000
GRANTOR: AP LAKESIDE LLC						
GRANTEE: GLEASON LISA M & MA						

BUILDING NOTES

BUILDING DIMENSIONS

BAS=[YR=2023;ORIG=60,4] W18 S21 W22 S61 E1 E31 E2 N20 W17 N10 N23 E23 N29 $
FGR=[YR=2023;ORIG=20,4] E22 S21 W22 N21 $
PTO=[YR=2023;ORIG=37,33] E23 S4 W6 S19 W17 N23 $
FUS=[YR=2023;ORIG=60,50] E17 D14.1L0.2 U0.1L3.10 S6 W5 W8 N20 $
FOP=[YR=2023;ORIG=21,86] E31 S8 W31 N8 $
FOP=[YR=2023;ORIG=37,66] E17 N10 W17 S10 $
STR=[YR=2023;ORIG=77,64] W4 S6 W5 S4 E9 N10 $
.

EXTRA FEATURES

LN	OB/XF CODE	DESCRIPTION	BLD	CAP	L	W	UNITS	UT	Adj R	ADJ UNIT PRICE	ORIG COND	YEAR ON	YEAR ACTUAL	Q	% COND	OB/XF MKT VALUE	NOTES
1	0855	CONC PAVER	1	100	0	0	312.00	SF	10.00	10.00	100	2023	2022		100	3,120	

LAND DESCRIPTION

TOTAL OB/XF 3,120

LN	USE CODE	CLS	LAND USE DESCRIPTION	CAP	RD	LOC ZONE	FRONT	DEPTH	TOT LND UTS	UNIT TYPE	DT	DPTH FACT	% COND	TOT ADJ	UNIT PRICE	ADJ UNIT PRICE	LAND VALUE	OTHER ADJUSTMENTS AND NOTES	YEAR	DENSITY	DECL	FRZ	YR	CONSRV
1	000100	C	SFR	100		R-2	0.00	0.00	1.00	LT		1.00	1.00	1.00	240,000.00	240,000.00	240,000							

REVIEW DATE 06/29/2023 BY TW Total Acres: 0.00 Total Land Value: 240,000 Market: 0 Agricultural: 0 Common: 240,000 PRINTED 08/06/2024 BY SYS