LOT 4
IN OR 2106/675
AMELIA PARK COASTAL DISTRICT

GARDNER BRUCE R IRREVOCABLE TRUST/GARDNER CHERYL A
1569 NORTHPARK DR
FERNANDINA BEACH, FL 32034

2024

00-00-31-102F-0004-0000

NASSAU COUNTY PROPERTY

BUILDING CHARACTERISTICS

ELEMENT	CD	CONSTRUCTION
Exterior Wall	10	ABOVE AVG 100
Roof Structur	03	GABLE/HIP 100
Roof Cover	03	COMP SHNGL 100
Interior Wall	05	DRYWALL 100
Interior Floo	12	HARDWOOD 70
Interior Floo	11	CLAY TILE 30
Air Condition	03	CENTRAL 100
Heating Type	04	AIR DUCTED 100
Bedrooms		3 100
Bathrooms		3.5 100
Frame	02	WOOD FRAME 100
Stories	2.	2. 100
Units		0 100
Occupancy	00	NONE 100
Quality	03	Quality Level 03
DOR CODE	0100	SINGLE FAMILY
MAP NUM		MKT AREA 01
NEIGHBORHOOD/LOC	1031.00	

AREA TYPE	TOTAL GROSS AREA	PCT OF BASE	TOT ADJ AREA	SUBAREA MARKET VALUE
BAS	2,050	100	2,050	392,627
FGR	528	55	290	55,542
FOP	114	30	34	6,512
FOP	184	30	55	10,534
FOP	187	30	56	10,726
FSP	265	40	106	20,302
FST	378	55	208	39,838
FUS	1,449	100	1,449	277,521
STR	72	10	7	1,340
TOTALS	5,227		4,255	814,940

MARKET ADJUSTMENTS

TYPE	MDL	EFF. AREA	TOT ADJ PTS	EFF. BASE RATE	REPL. COST NEW	AYB	EYB	ECON	FNCT		NORM	% COND
0500	11	4,255	128.9710	193.46	823,172	2020	2020	0	0	0	1.00	99.00

1 SFR CUST – 100% - 2021 Heated Area: 3499 HX Base Yr 2021

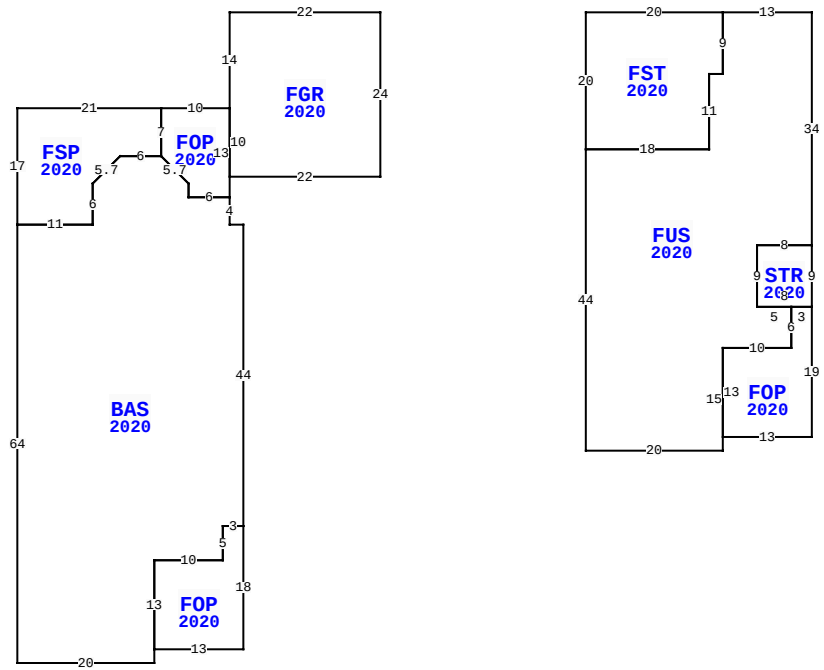

1569 NORTHPARK DR, FERNANDINA BEACH

BLD DATE		LGL DATE	
XF DATE		LAND DATE	03/21/2024 MLU
INC DATE		AG DATE	

VALUATION SUMMARY

VALUATION BY		STANDARD
Tax Group: 2	Tax Dist:	
BUILDING MARKET VALUE		814,940
TOTAL MARKET OB/XF VALUE		6,198
TOTAL LAND VALUE - MARKET		240,000
TOTAL MARKET VALUE		1,061,138
SOH/AGL Deduction		362,271
ASSESSED VALUE		698,867
TOTAL EXEMPTION VALUE	HX HB	50,000
BASE TAXABLE VALUE		648,867
TOTAL JUST VALUE		1,061,138
NCON VALUE		0
INCOME VALUE		
PREVIOUS YEAR MKT VALUE		860,160

PERMIT NUM	DESCRIPTION	AMT	ISSUED
20190250	NEW CONSTR	0	06/11/2019
20190300	GARAGE	0	06/11/2019

SALES DATA

OFF RECORD Number	DATE	TYPE INST	Q U	V I	RSN CD	SALE PRICE
2106/0675	3/09/2017	WD	Q	V	01	124,000
GRANTOR: HARNED SUZANNE						
GRANTEE: BRUCE R GARDNER IRR						
1964/1517	2/23/2015	WD	Q	V	01	115,000
GRANTOR: NIELSEN STEVEN W & MI						
GRANTEE: HARNED SUZANNE						

BUILDING NOTES

BUILDING DIMENSIONS

FGR=[YR=2020] W22 S14 FOP=[YR=2020] W10 FSP=[YR=2020] W21 S17 BAS=[YR=2020] S64 E20 N2 FOP=[YR=2020] E13 N18 W3 S5 W10 S13 $ N13 E10 N5 E3 N44 W2 N4 W6 N2 L4 U4 W6 D4 L4 S6 W11$ E11 N6 U4 R4 E6 N7 $ S7 D4 R4 S2 E6 N13 $S10 E22 N24 $ PTR= E30 FST=[YR=2020] E20 FUS=[YR=2020] E13 S34 STR=[YR=2020] S9 FOP=[YR=2020] S19 W13 N13 E10 N6 E3 $ W8 N9 E8 $ W8 S9 E5 S6 W10 S15 W20 N44 E18 N11 E2 N9 $ S9 W2 S11 W18 N20 $ W30 $.

EXTRA FEATURES

LN	OB/XF CODE	DESCRIPTION	BLD	CAP	L	W	UNITS	UT	Adj R	ADJ UNIT PRICE	ORIG COND	YEAR ON	YEAR ACTUAL	Q	% COND	OB/XF MKT VALUE	NOTES
1	0811	CONCRETE B	0	100	0	0	857.00	SF	5.20	5.20	100	2020	2020	3	99	4,412	
2	0462	ST/AL FNC	0	100	0	0	192.00	SF	10.00	10.00	100	2020	2020	3	93	1,786	

LAND DESCRIPTION

TOTAL OB/XF 6,198

LN	USE CODE	CLS	LAND USE DESCRIPTION	CAP	RD	LOC ZONE	FRONT	DEPTH	TOT LND UTS	UNIT TYPE	DT	DPTH FACT	% COND	TOT ADJ	UNIT PRICE	ADJ UNIT PRICE	LAND VALUE	OTHER ADJUSTMENTS AND NOTES	YEAR	DENSITY	DECL	FRZ	YR	CONSRV
1	000100	C	SFR	100		R-2	0.00	0.00	60.00	FF		1.00	1.00	1.00	4,000.00	4,000.00	240,000							

REVIEW DATE 10/07/2020 BY RK Total Acres: 0.00 Total Land Value: 240,000 Market: 0 Agricultural: 0 Common: 240,000 PRINTED 08/06/2024 BY SYS