BLOCK 4 LOT 8
AMELIA PARK COASTAL DISTRICT
PB 7/322

BYRD JOHN & KELLI TRUST/BYRD JOHN A TRUSTEE
12401 S 14TH ST E
JENKS, OK 74037

2024

00-00-31-102D-0004-0080

NASSAU COUNTY PROPERTY

BUILDING CHARACTERISTICS

ELEMENT	CD	CONSTRUCTION
Exterior Wall	10	ABOVE AVG 100
Roof Structur	08	IRREGULAR 100
Roof Cover	03	COMP SHNGL 100
Interior Wall	05	DRYWALL 100
Interior Floo	12	HARDWOOD 60
Interior Floo	14	CARPET 40
Air Condition	03	CENTRAL 100
Heating Type	04	AIR DUCTED 100
Bedrooms		4 100
Bathrooms		2 100
Frame	02	WOOD FRAME 100
Stories	1.	1. 100
Units		0 100
Occupancy	00	NONE 100
Quality	03	Quality Level 03
DOR CODE	0100	SINGLE FAMILY
MAP NUM		MKT AREA 01
NEIGHBORHOOD/LOC	1031.00	

AREA TYPE	TOTAL GROSS AREA	PCT OF BASE	TOT ADJ AREA	SUBAREA MARKET VALUE
BAS	1,854	100	1,854	376,831
DCK	18	10	2	407
DCK	21	10	2	407
FDC	242	35	85	17,277
FDG	308	60	185	37,602
FOP	153	30	46	9,349
FOP	256	30	77	15,651
TOTALS	2,852		2,251	457,521

MARKET ADJUSTMENTS

TYPE	MDL	EFF. AREA	TOT ADJ PTS	EFF. BASE RATE	REPL. COST NEW	AYB	EYB	ECON	FNCT		NORM	% COND
0500	11	2,251	141.8844	212.83	479,080	2013	2013	0	0	0	4.50	95.50

1 SFR CUST – 0% - 2024 Heated Area: 1854 HX Base Yr

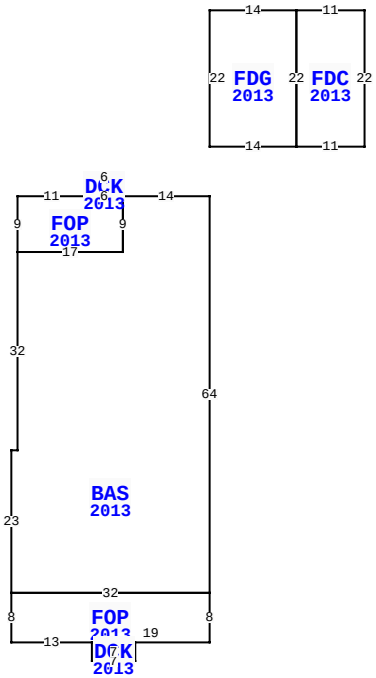

1711 S 15TH ST, FERNANDINA BEACH

BLD DATE	10/24/2013 KK	LGL DATE	
XF DATE		LAND DATE	03/21/2024 MLU
INC DATE		AG DATE	

VALUATION SUMMARY

VALUATION BY	STANDARD
Tax Group: 2	Tax Dist:
BUILDING MARKET VALUE	457,521
TOTAL MARKET OB/XF VALUE	4,338
TOTAL LAND VALUE - MARKET	180,000
TOTAL MARKET VALUE	641,859
SOH/AGL Deduction	0
ASSESSED VALUE	641,859
TOTAL EXEMPTION VALUE	0
BASE TAXABLE VALUE	641,859
TOTAL JUST VALUE	641,859
NCON VALUE	0
INCOME VALUE	
PREVIOUS YEAR MKT VALUE	517,812

PERMIT NUM	DESCRIPTION	AMT	ISSUED
20131541	H/AC	4,595	07/02/2013
20130605	NEW CONSTR	195,759	03/25/2013

SALES DATA

OFF RECORD Number	DATE	TYPE INST	Q / U	V / I	RSN CD	SALE PRICE
2699/506	3/11/2024	WD	Q	I	01	750,000
GRANTOR: NEIBAUR DALE & TERESA						
GRANTEE: BYRD JOHN & KELLI T						
2548/0987	3/18/2022	WD	Q	I	01	655,000
GRANTOR: SAITOW PROPERTIES LLC						
GRANTEE: NEIBAUR DALE & TERE						

BUILDING NOTES

BUILDING DIMENSIONS

BAS=[YR=2013] W14 DCK=[YR=2013] N3 W6 S3 FOP=[YR=2013] W11 S9 E17 N9 W6$ E6$ S9 W17 S32 W1 S23 FOP=[YR=2013] S8 E13 DCK=[YR=2013] S3 E7 N3 W7$ E19 N8 W32$ E32 N64$ PTR=N30 FDG=[YR=2013] E14 FDC=[YR=2013] E11 S22 W11 N22$ S22 W14 N22$ S30$.

EXTRA FEATURES

LN	OB/XF CODE	DESCRIPTION	BLD	CAP	L	W	UNITS	UT	Adj R	ADJ UNIT PRICE	ORIG COND	YEAR ON	YEAR ACTUAL	Q	% COND	OB/XF MKT VALUE	NOTES
1	0810	CONCRETE A	0	0	0	0	483.00	SF	6.50	6.50	100	2013	2013	3	94	2,951	
2	0810	CONCRETE A	0	0	0	0	142.00	SF	6.50	6.50	100	2013	2013	3	94	868	
3	0810	CONCRETE A	0	0	0	0	85.00	SF	6.50	6.50	100	2013	2013	3	94	519	

LAND DESCRIPTION

TOTAL OB/XF 4,338

LN	USE CODE	CLS	LAND USE DESCRIPTION	CAP	RD	LOC ZONE	FRONT	DEPTH	TOT LND UTS	UNIT TYPE	DT	DPTH FACT	% COND	TOT ADJ	UNIT PRICE	ADJ UNIT PRICE	LAND VALUE	OTHER ADJUSTMENTS AND NOTES	YEAR	DENSITY	DECL	FRZ	YR	CONSRV
1	000100	C	SFR	0	0003	R-2	0.00	0.00	45.00	FF		1.00	1.00	1.00	4,000.00	4,000.00	180,000							

REVIEW DATE 05/12/2019 BY KBA Total Acres: 0.00 Total Land Value: 180,000 Market: 0 Agricultural: 0 Common: 180,000 PRINTED 08/06/2024 BY SYS