BLOCK 2 LOT 11
AMELIA PARK COASTAL DISTRICT
PB 7/322

HOOK FAMILY REVOCABLE TRUST/HOOK JAMES L TRUSTEE
1522 NORTHPARK DRIVE
FERNANDINA BEACH, FL 32034

2024

00-00-31-102D-0002-0110

NASSAU COUNTY PROPERTY

BUILDING CHARACTERISTICS

ELEMENT	CD	CONSTRUCTION
Exterior Wall	10	ABOVE AVG 100
Roof Structur	08	IRREGULAR 100
Roof Cover	03	COMP SHNGL 90
Roof Cover	12	MODULAR MT 10
Interior Wall	05	DRYWALL 100
Interior Floo	12	HARDWOOD 70
Interior Floo	14	CARPET 30
Air Condition	03	CENTRAL 100
Heating Type	04	AIR DUCTED 100
Bedrooms		4 100
Bathrooms		3 100
Frame	02	WOOD FRAME 100
Stories	2.	2. 100
Units		0 100
Occupancy	00	NONE 100
Quality	03	Quality Level 03
DOR CODE	0100	SINGLE FAMILY
MAP NUM		MKT AREA 01
NEIGHBORHOOD/LOC	1031.00	

AREA TYPE	TOTAL GROSS AREA	PCT OF BASE	TOT ADJ AREA	SUBAREA MARKET VALUE
BAS	1,963	100	1,963	384,971
FGR	576	55	317	62,168
FOP	408	30	122	23,926
FOP	411	30	123	24,122
FUS	862	100	862	169,050
STP	12	10	1	196
STP	18	10	2	392
STR	56	10	6	1,177
TOTALS	4,306		3,396	666,002

MARKET ADJUSTMENTS

TYPE	MDL	EFF. AREA	TOT ADJ PTS	EFF. BASE RATE	REPL. COST NEW	AYB	EYB	ECON	FNCT		NORM	% COND
0500	11	3,396	132.7302	199.10	676,144	2019	2019	0	0	0	1.50	98.50

1 SFR CUST – 100% - 2021 Heated Area: 2825 HX Base Yr 2021

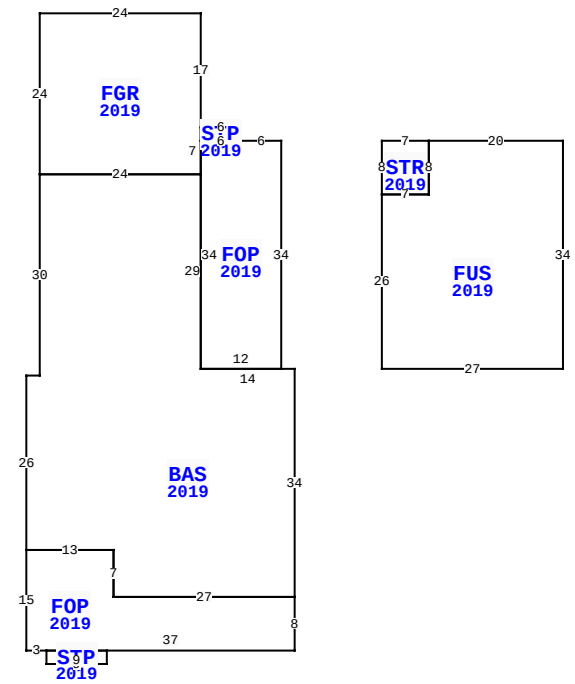

1522 NORTHPARK DR, FERNANDINA BEACH

BLD DATE		LGL DATE	
XF DATE		LAND DATE	03/21/2024 MLU
INC DATE		AG DATE	

VALUATION SUMMARY

VALUATION BY		STANDARD
Tax Group: 2	Tax Dist:	
BUILDING MARKET VALUE		666,002
TOTAL MARKET OB/XF VALUE		3,195
TOTAL LAND VALUE - MARKET		200,000
TOTAL MARKET VALUE		869,197
SOH/AGL Deduction		342,339
ASSESSED VALUE		526,858
TOTAL EXEMPTION VALUE	HX HB	50,000
BASE TAXABLE VALUE		476,858
TOTAL JUST VALUE		869,197
NCON VALUE		0
INCOME VALUE		
PREVIOUS YEAR MKT VALUE		729,045

PERMIT NUM	DESCRIPTION	AMT	ISSUED
2024-0236	SCRN IN FOP		05/02/2024
20190125	NEW CONSTR	0	02/07/2019

SALES DATA

OFF RECORD Number	DATE	TYPE INST	Q U	V I	RSN CD	SALE PRICE
2371/0757	6/26/2020	WD	Q	I	02	674,000
GRANTOR: CELLARIUS CAPITAL INC						
GRANTEE: HOOK FMAILY REVOCAB						
2183/1445	3/15/2018	WD	Q	V	01	129,000
GRANTOR: OLLER GAYLE G & LINDA						
GRANTEE: CELLARIUS CAPITAL I						

BUILDING NOTES

BUILDING DIMENSIONS

FOP=[YR=2019] W6 STP=[YR=2019] N2 W6 FGR=[YR=2019] N17 W24 S24 BAS=[YR=2019] S30 W2 S26 FOP=[YR=2019] S15 E3 STP=[YR=2019] S2 E9 N2 W9$ E37 N8 W27 N7 W13$ E13 S7 E27 N34 W14 N29 W24$ E24 N7$ S2 E6$ W6 S34 E12 N34$ PTR=E15 STR=[YR=2019] E7 FUS=[YR=2019] E20 S34 W27 N26 E7 N8$ S8 W7 N8$ W15$.

EXTRA FEATURES

LN	OB/XF CODE	DESCRIPTION	BLD	CAP	L	W	UNITS	UT	Adj R	ADJ UNIT PRICE	ORIG COND	YEAR ON	YEAR ACTUAL	Q	% COND	OB/XF MKT VALUE	NOTES
1	0810	CONCRETE A	0	100	0	0	214.00	SF	6.50	6.50	100	2019	2019	3	98	1,363	
2	0855	CONC PAVER	0	100	0	0	79.00	SF	10.00	10.00	100	2019	2019	3	98	774	
3	0855	CONC PAVER	0	100	0	0	108.00	SF	10.00	10.00	100	2019	2019	3	98	1,058	

LAND DESCRIPTION

TOTAL OB/XF 3,195

LN	USE CODE	CLS	LAND USE DESCRIPTION	CAP	RD	LOC ZONE	FRONT	DEPTH	TOT LND UTS	UNIT TYPE	DT	DPTH FACT	% COND	TOT ADJ	UNIT PRICE	ADJ UNIT PRICE	LAND VALUE	OTHER ADJUSTMENTS AND NOTES	YEAR	DENSITY	DECL	FRZ	YR	CONSRV
1	000100	C	SFR	100		R-2	0.00	0.00	50.00	FF		1.00	1.00	1.00	4,000.00	4,000.00	200,000							

REVIEW DATE 12/17/2019 BY DJ Total Acres: 0.00 Total Land Value: 200,000 Market: 0 Agricultural: 0 Common: 200,000 PRINTED 08/06/2024 BY SYS