BLOCK 1 LOT 5
IN OR 1939/1195
AMELIA PARK COASTAL DISTRICT

EBERLE ROBERT & NANCY
1575 OLMSTED LANE
FERNANDINA BEACH, FL 32034

2024

00-00-31-102D-0001-0050

NASSAU COUNTY PROPERTY

BUILDING CHARACTERISTICS

ELEMENT	CD	CONSTRUCTION
Exterior Wall	10	ABOVE AVG 100
Roof Structur	08	IRREGULAR 100
Roof Cover	03	COMP SHNGL 100
Interior Wall	05	DRYWALL 100
Interior Floo	11	CLAY TILE 50
Interior Floo	14	CARPET 50
Air Condition	03	CENTRAL 100
Heating Type	04	AIR DUCTED 100
Bedrooms		3 100
Bathrooms		2.5 100
Frame	02	WOOD FRAME 100
Stories	2.	2. 100
Units		0 100
Occupancy	00	NONE 100
Quality	03	Quality Level 03

DOR CODE 0100 SINGLE FAMILY
MAP NUM | MKT AREA 01
NEIGHBORHOOD/LOC 1031.00

AREA TYPE	TOTAL GROSS AREA	PCT OF BASE	TOT ADJ AREA	SUBAREA MARKET VALUE
BAS	1,266	100	1,266	271,675
FGR	552	55	304	65,236
FOP	176	30	53	11,373
FSP	204	40	82	17,597
FUS	525	100	525	112,662
STP	15	10	2	429
STP	24	10	2	429
STR	30	10	3	644
TOTALS	2,792		2,237	480,045

MARKET ADJUSTMENTS

TYPE	MDL	EFF. AREA	TOT ADJ PTS	EFF. BASE RATE	REPL. COST NEW	AYB	EYB	ECON	FNCT		NORM	% COND
0500	11	2,237	147.4851	221.23	494,892	2016	2016	0	0	0	3.00	97.00

1 SFR CUST – 100% - 2018 Heated Area: 1791 HX Base Yr 2018

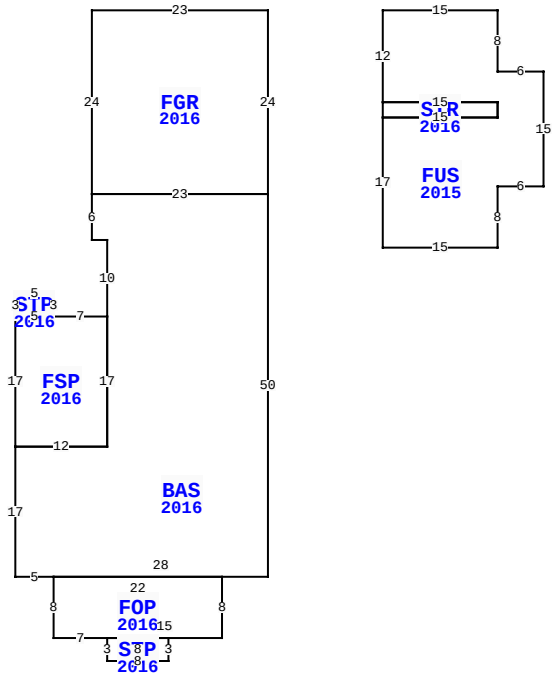

1575 OLMSTED LN, FERNANDINA BEACH

BLD DATE		LGL DATE	
XF DATE		LAND DATE	03/21/2024 MLU
INC DATE		AG DATE	

NASSAU COUNTY PROPERTY — VALUATION SUMMARY

VALUATION BY		STANDARD
Tax Group: 2	Tax Dist:	
BUILDING MARKET VALUE		480,045
TOTAL MARKET OB/XF VALUE		2,219
TOTAL LAND VALUE - MARKET		180,000
TOTAL MARKET VALUE		662,264
SOH/AGL Deduction		237,486
ASSESSED VALUE		424,778
TOTAL EXEMPTION VALUE	HX HB	50,000
BASE TAXABLE VALUE		374,778
TOTAL JUST VALUE		662,264
NCON VALUE		0
INCOME VALUE		
PREVIOUS YEAR MKT VALUE		534,270

PERMIT NUM	DESCRIPTION	AMT	ISSUED
20152527	CO ISSUED	0	04/25/2016
20152527	NEW CONSTR	235,569	10/28/2015

SALES DATA

OFF RECORD Number	DATE	TYPE INST	Q / U	V / I	RSN CD	SALE PRICE
1939/1195	9/19/2014	WD	Q	V	02	102,000
GRANTOR: WILLETTE MARK T & DEI						
GRANTEE: EBERLE ROBERT & NAN						
1899/1909	12/11/2013	WD	U	V	11	100
GRANTOR: LONG JAY WILLIAM JR &						
GRANTEE: WILLETTE MARK T & D						

BUILDING NOTES

BUILDING DIMENSIONS

FGR=[YR=2016] W23 S24 BAS=[YR=2016] S6 E2 S10 FSP=[YR=2016] W7 STP=[YR=2016] N3 W5 S3 E5$ W5 S17 E12 N17$ S17 W12 S17 E5 FOP=[YR=2016] S8 E7 STP=[YR=2016] S3 E8 N3 W8$ E15 N8 W22$ E28 N50 W23$ E23 N24$ PTR=E15 FUS=[YR=2015] E15 S8 E6 S15 W6 S8 W15 N17 STR=[YR=2016] E15 N2 W15 S2$ E15 N2 W15 N12$ W15$.

EXTRA FEATURES

LN	OB/XF CODE	DESCRIPTION	BLD	CAP	L	W	UNITS	UT	Adj R	ADJ UNIT PRICE	ORIG COND	YEAR ON	YEAR ACTUAL	Q	% COND	OB/XF MKT VALUE	NOTES
1	0810	CONCRETE A	0	100	0	0	268.00	SF	6.50	6.50	100	2016	2016	3	96	1,672	
2	0476	VF 6 SBPL	0	100	0	0	19.00	LF	32.00	32.00	100	2016	2016	3	90	547	

LAND DESCRIPTION

TOTAL OB/XF 2,219

LN	USE CODE	CLS	LAND USE DESCRIPTION	CAP	RD	LOC ZONE	FRONT	DEPTH	TOT LND UTS	UNIT TYPE	DT	DPTH FACT	% COND	TOT ADJ	UNIT PRICE	ADJ UNIT PRICE	LAND VALUE	OTHER ADJUSTMENTS AND NOTES	YEAR	DENSITY	DECL	FRZ	YR	CONSRV
1	000100	C	SFR	100		R-2	0.00	0.00	45.00	FF		1.00	1.00	1.00	4,000.00	4,000.00	180,000							

REVIEW DATE 01/14/2021 BY TWA Total Acres: 0.00 Total Land Value: 180,000 Market: 0 Agricultural: 0 Common: 180,000 PRINTED 08/06/2024 BY SYS