LOT 15
IN OR 2149/1465
ALTA VISTA 2 PB 2/44

TITTLE THOMAS SCOTT & MARSHA
2114 HIGHLAND ST
FERNANDINA BEACH, FL 32034

2024

00-00-31-100B-0015-0000

BUILDING CHARACTERISTICS

ELEMENT	CD	CONSTRUCTION
Exterior Wall	05	AVERAGE 100
Roof Structur	03	GABLE/HIP 100
Roof Cover	03	COMP SHNGL 100
Interior Wall	05	DRYWALL 100
Interior Floo	12	HARDWOOD 80
Interior Floo	15	HARDTILE 20
Air Condition	03	CENTRAL 100
Heating Type	04	AIR DUCTED 100
Bedrooms		3 100
Bathrooms		2 100
Frame	02	WOOD FRAME 100
Stories	1.5	1.5 100
Units		0 100
BUD8 Adjustme	02	DIST FB 100
Occupancy	00	NONE 100
Quality	04	Quality Level 04
DOR CODE	0100	SINGLE FAMILY
MAP NUM		MKT AREA 01
NEIGHBORHOOD/LOC	1007.00	

AREA TYPE	TOTAL GROSS AREA	PCT OF BASE	TOT ADJ AREA	SUBAREA MARKET VALUE
BAS	1,062	100	1,062	128,046
DCK	480	10	48	5,788
FGR	573	55	315	37,979
FOP	150	30	45	5,425
FST	60	55	33	3,979
FUS	648	100	648	78,130
TOTALS	2,973		2,151	259,348

MARKET ADJUSTMENTS

TYPE	MDL	EFF. AREA	TOT ADJ PTS	EFF. BASE RATE	REPL. COST NEW	AYB	EYB	ECON	FNCT		NORM	% COND
0900	01	2,151	115.8654	144.83	311,529	1985	1985	0	0	0	16.75	83.25

1 SNGL FAM – 100% - 2013 Heated Area: 1710 HX Base Yr 2013

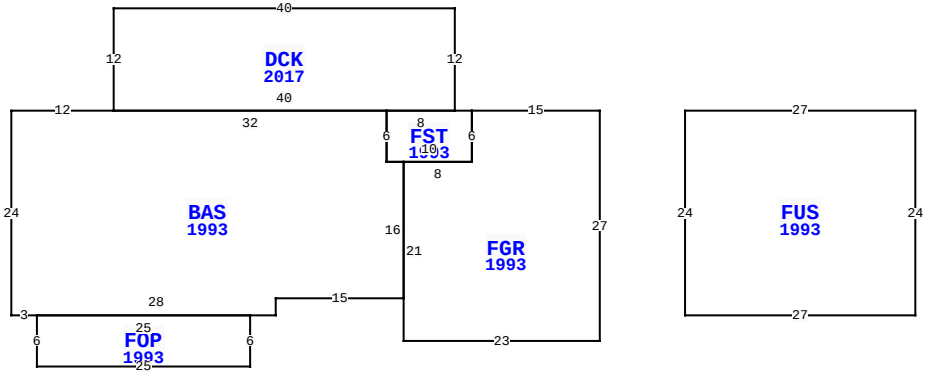

2114 HIGHLAND ST, FERNANDINA BEACH

BLD DATE		LGL DATE	
XF DATE		LAND DATE	
INC DATE		AG DATE	

NASSAU COUNTY PROPERTY

PAGE 1 of 1 2

VALUATION SUMMARY

VALUATION BY		STANDARD
Tax Group: 2	Tax Dist:	
BUILDING MARKET VALUE		259,348
TOTAL MARKET OB/XF VALUE		49,739
TOTAL LAND VALUE - MARKET		275,000
TOTAL MARKET VALUE		584,087
SOH/AGL Deduction		340,513
ASSESSED VALUE		243,574
TOTAL EXEMPTION VALUE	HX HB	50,000
BASE TAXABLE VALUE		193,574
TOTAL JUST VALUE		584,087
NCON VALUE		0
INCOME VALUE		
PREVIOUS YEAR MKT VALUE		573,648

PERMIT NUM	DESCRIPTION	AMT	ISSUED
20162369	SWIM POOL	41,800	08/29/2016
3116B	NEW CONSTR	81,325	01/01/1985

SALES DATA

OFF RECORD Number	DATE	TYPE INST	Q U /	V I /	RSN CD	SALE PRICE
2149/1465	8/10/2017	QC	U	I	11	100
GRANTOR: TITTLE THOMAS S & THO						
GRANTEE: TITTLE THOMAS SCOTT						
1993/0494	5/22/2015	QC	U	I	11	100
GRANTOR: TITTLE THOMAS SCOTT &						
GRANTEE: TITTLE THOMAS SCOTT						

BUILDING NOTES

BUILDING DIMENSIONS

FGR=[YR=1993] W15 FST=[YR=1993] W2 DCK=[YR=2017] N12 W40 S12 BAS=[YR=1993] W12 S24 E3FOP=[YR=1993] S6 E25 N6 W25$ E28 N2 E15 N16 W2 N6 W32$ E40$ W8 S6 E10 N6$ S6 W8 S21 E23 N27$ PTR=E10 FUS=[YR=1993] E27 S24 W27 N24$ W10$.

EXTRA FEATURES

LN	OB/XF CODE	DESCRIPTION	BLD	CAP	L	W	UNITS	UT	Adj R	ADJ UNIT PRICE	ORIG COND	YEAR ON	YEAR ACTUAL	Q	% COND	OB/XF MKT VALUE	NOTES
1	0810	CONCRETE A	0	100	30	5	150.00	SF	6.50	6.50	100	1985	1985	3	47	458	
2	0810	CONCRETE A	0	100	80	20	1,600.00	SF	6.50	6.50	100	1985	1985	3	47	4,888	
3	0500	FP-PRE FAB	0	100	0	0	1.00	UT	3,500.00	3,500.00	100	1985	1985	3	58	2,030	
4	0861	POOL GUNIT	0	100	0	0	540.00	SF	85.00	85.00	100	2016	2016	3	81	37,179	
5	0855	CONC PAVER	0	100	0	0	540.00	SF	10.00	10.00	100	2016	2016	3	96	5,184	

LAND DESCRIPTION

TOTAL OB/XF 49,739

LN	USE CODE	CLS	LAND USE DESCRIPTION	CAP	RD	LOC ZONE	FRONT	DEPTH	TOT LND UTS	UNIT TYPE	DT	DPTH FACT	% COND	TOT ADJ	UNIT PRICE	ADJ UNIT PRICE	LAND VALUE	OTHER ADJUSTMENTS AND NOTES	YEAR	DENSITY	DECL	FRZ	YR	CONSRV
1	000100	C	SFR	100	0006	R-1	100.00	157.00	1.00	LT		1.00	1.00	1.00	275,000.00	275,000.00	275,000							

REVIEW DATE 02/27/2024 BY TWA Total Acres: 0.00 Total Land Value: 275,000 Market: 0 Agricultural: 0 Common: 275,000 PRINTED 08/06/2024 BY SYS