LOT 121
ISLE DE MAI AT AMELIA #2
PB 7/188

HILL JOHN M & SHARON PETTIJOHN
2972 FERDINAND CT
FERNANDINA BEACH, FL 32034

2024

00-00-31-087I-0121-0000

BUILDING CHARACTERISTICS

ELEMENT	CD	CONSTRUCTION
Exterior Wall	16	WD FR STUC 100
Roof Structur	08	IRREGULAR 100
Roof Cover	03	COMP SHNGL 100
Interior Wall	05	DRYWALL 100
Interior Floo	11	CLAY TILE 70
Interior Floo	14	CARPET 30
Air Condition	03	CENTRAL 100
Heating Type	04	AIR DUCTED 100
Bedrooms		4 100
Bathrooms		3 100
Frame	02	WOOD FRAME 100
Stories	1.5	1.5 100
Units		0 100
Occupancy	00	NONE 100
Quality	03	Quality Level 03
DOR CODE	0100	SINGLE FAMILY
MAP NUM		MKT AREA 01
NEIGHBORHOOD/LOC	1079.00	

AREA TYPE	TOTAL GROSS AREA	PCT OF BASE	TOT ADJ AREA	SUBAREA MARKET VALUE
BAS	2,433	100	2,433	417,869
FGR	506	55	278	47,747
FOP	77	30	23	3,950
FOP	288	30	86	14,771
FUS	364	100	364	62,518
TOTALS	3,668		3,184	546,853

MARKET ADJUSTMENTS

TYPE	MDL	EFF. AREA	TOT ADJ PTS	EFF. BASE RATE	REPL. COST NEW	AYB	EYB	ECON	FNCT		NORM	% COND
0500	01	3,184	109.5720	180.79	575,635	2013	2013	0	0	0	5.00	95.00

1 SFR CUST – 100% - 2023 Heated Area: 2797 HX Base Yr 2023

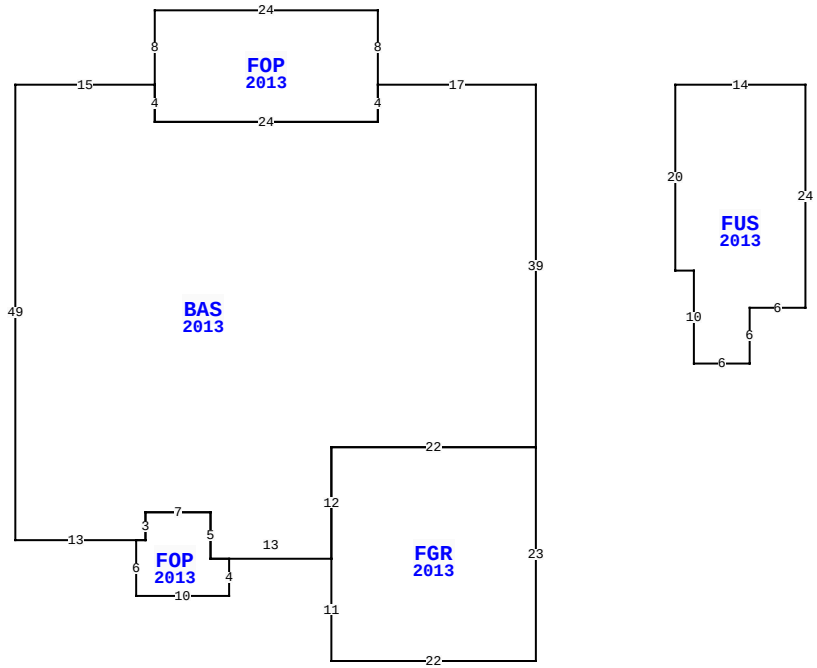

2972 FERDINAND CT, FERNANDINA BEACH

BLD DATE		LGL DATE	
XF DATE		LAND DATE	03/13/2024 MLU
INC DATE		AG DATE	

NASSAU COUNTY PROPERTY

PAGE 1 of 1 2

VALUATION SUMMARY

VALUATION BY		STANDARD
Tax Group: 2	Tax Dist:	
BUILDING MARKET VALUE		546,853
TOTAL MARKET OB/XF VALUE		67,334
TOTAL LAND VALUE - MARKET		150,000
TOTAL MARKET VALUE		764,187
SOH/AGL Deduction		106,540
ASSESSED VALUE		657,647
TOTAL EXEMPTION VALUE	HX HB	50,000
BASE TAXABLE VALUE		607,647
TOTAL JUST VALUE		764,187
NCON VALUE		60,913
INCOME VALUE		
PREVIOUS YEAR MKT VALUE		673,470

PERMIT NUM	DESCRIPTION	AMT	ISSUED
20222612	SWIM POOL	100,800	12/13/2022
20132081	WALLUNDER	0	09/05/2013
20130811	NEW CONSTR	2,000	04/16/2013
20130664	H/AC	6,700	04/01/2013
20122306	NEW CONSTR	2,800	11/13/2012
20121877	NEW CONSTR	298,087	09/11/2012

SALES DATA

OFF RECORD Number	DATE	TYPE INST	Q / U	V / I	RSN CD	SALE PRICE
2558/1245	4/27/2022	WD	Q	I	02	780,000
GRANTOR: CULLEN SCOTT M &						
GRANTEE: HILL JOHN MILLIKAN						
1874/0805	8/13/2013	WD	Q	I	02	382,900
GRANTOR: SEDA CONSTRUCTION COM						
GRANTEE: CULLEN SCOTT M & DE						

BUILDING NOTES

BUILDING DIMENSIONS

BAS=[YR=2013;ORIG=0,0] W17 S4 W24 N4 W15 S49 E13 E1 N3 E7 S5 E13 N12 E22 N39 $
FGR=[YR=2013;ORIG=-22,51] S11 E22 N23 W22 S12 $
FUS=[YR=2013;ORIG=15,0] E14 S24 W6 S6 W6 N10 W2 N20 $
FOP=[YR=2013;ORIG=-17,0] N8 W24 S8 S4 E24 N4 $
FOP=[YR=2013;ORIG=-43,49] S6 E10 N4 W2 N5 W7 S3 W1 $
PTR=[ORIG=0,0] E15 W15 $
.

EXTRA FEATURES

LN	OB/XF CODE	DESCRIPTION	BLD	CAP	L	W	UNITS	UT	Adj R	ADJ UNIT PRICE	ORIG COND	YEAR ON	YEAR ACTUAL	Q	% COND	OB/XF MKT VALUE	NOTES
1	0504	FP-ELECTRI	0	100	0	0	1.00	UT	2,000.00	2,000.00	100	2013	2013	3	96	1,920	
2	0855	CONC PAVER	0	100	0	0	544.00	SF	7.00	7.00	100	2013	2013	3	94	3,580	
3	0855	CONC PAVER	0	100	0	0	98.00	SF	10.00	10.00	100	2013	2013	3	94	921	
4	0861	POOL GUNIT	1	100	0	0	360.00	SF	85.00	85.00	100	2024	2023		100	30,600	
5	0857	SANDSTONE/	1	100	0	0	568.00	SF	16.00	16.00	100	2024	2023		100	9,088	
6	0871	POOL HTR R	1	100	0	0	1.00	UT	4,000.00	4,000.00	100	2024	2023		100	4,000	
7	0462	ST/AL FNC	1	100	0	0	336.00	SF	10.00	10.00	100	2024	2023		100	3,360	
8	0463	FENCE GATE	1	100	0	0	2.00	UT	300.00	300.00	100	2024	2023		100	600	
9	0911	SCRN RM A	1	100	0	0	758.00	SF	17.50	17.50	100	2024	2023		100	13,265	

LAND DESCRIPTION

TOTAL OB/XF 67,334

LN	USE CODE	CLS	LAND USE DESCRIPTION	CAP	RD	LOC ZONE	FRONT	DEPTH	TOT LND UTS	UNIT TYPE	DT	DPTH FACT	% COND	TOT ADJ	UNIT PRICE	ADJ UNIT PRICE	LAND VALUE	OTHER ADJUSTMENTS AND NOTES	YEAR	DENSITY	DECL	FRZ	YR	CONSRV
1	000100	C	SFR	100	0003	R-1	0.00	0.00	1.00	LT		1.00	1.00	1.00	150,000.00	150,000.00	150,000							

REVIEW DATE 08/09/2023 BY TW Total Acres: 0.00 Total Land Value: 150,000 Market: 0 Agricultural: 0 Common: 150,000 PRINTED 08/06/2024 BY SYS