LOT 20
IN OR 1962/1206
THE SANDPIPER #2 PB 6/233

SARDO MARK R & CYNTHIA H
2020 DIXON LN
ST SIMONS, GA 31522

2024

00-00-30-2060-0020-0000

NASSAU COUNTY PROPERTY

BUILDING CHARACTERISTICS

ELEMENT	CD	CONSTRUCTION
Exterior Wall	17	CB STUCCO 100
Roof Structur	01	FLAT 100
Roof Cover	07	CONC TILE 100
Interior Wall	05	DRYWALL 100
Interior Floo	11	CLAY TILE 80
Interior Floo	14	CARPET 20
Air Condition	03	CENTRAL 100
Heating Type	04	AIR DUCTED 100
Bedrooms		4 100
Bathrooms		4.5 100
Frame	02	WOOD FRAME 100
Stories	3.	3. 100
Units		0 100
Quality	05	Quality Level 05
DOR CODE	0100	SINGLE FAMILY
MAP NUM		MKT AREA 03
NEIGHBORHOOD/LOC	3004.00	

AREA TYPE	TOTAL GROSS AREA	PCT OF BASE	TOT ADJ AREA	SUBAREA MARKET VALUE
BAS	108	100	108	14,415
BAS	416	100	416	55,527
FGR	396	55	218	29,098
FOP	18	30	5	667
FOP	65	30	20	2,670
FST	30	55	16	2,136
FUS	1,075	100	1,075	143,490
FUS	1,095	100	1,095	146,160
UOP	40	20	8	1,067
UOP	42	20	8	1,067
TOTALS	4,064		3,124	416,987

MARKET ADJUSTMENTS

TYPE	MDL	EFF. AREA	TOT ADJ PTS	EFF. BASE RATE	REPL. COST NEW	AYB	EYB	ECON	FNCT		NORM	% COND
0320	11	3,124	154.3981	146.68	458,228	2005	2005	0	0	0	9.00	91.00

1 TOWNHOUSE - 0% - 0 Heated Area: 2694 HX Base Yr

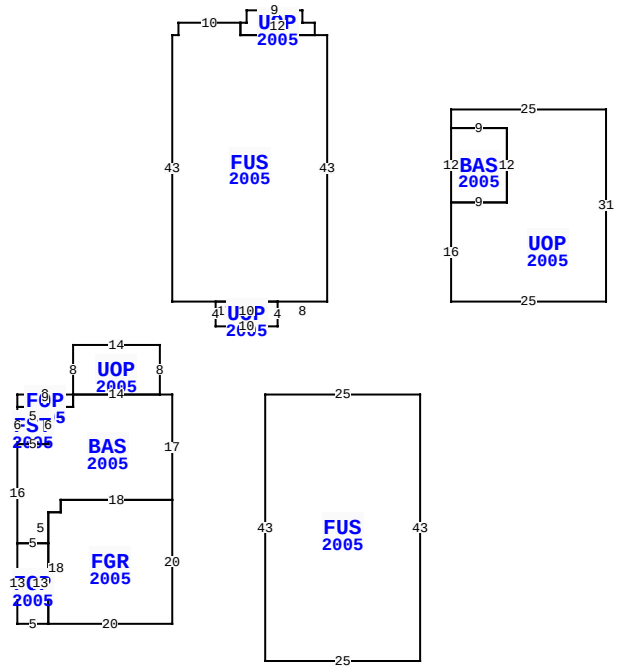

** This building has 12 Sub-Areas

95040 SANDPIPER LOOP, FERNANDINA BEACH

BLD DATE		LGL DATE	
XF DATE		LAND DATE	05/15/2023 MLU
INC DATE		AG DATE	

NASSAU COUNTY PROPERTY — VALUATION SUMMARY

VALUATION BY	STANDARD
Tax Group: 8	Tax Dist:
BUILDING MARKET VALUE	416,987
TOTAL MARKET OB/XF VALUE	21,190
TOTAL LAND VALUE - MARKET	450,000
TOTAL MARKET VALUE	888,177
SOH/AGL Deduction	46,724
ASSESSED VALUE	841,453
TOTAL EXEMPTION VALUE	0
BASE TAXABLE VALUE	841,453
TOTAL JUST VALUE	888,177
NCON VALUE	0
INCOME VALUE	
PREVIOUS YEAR MKT VALUE	890,599

PERMIT NUM	DESCRIPTION	AMT	ISSUED
B0310947	NEW CONSTR	336,600	03/01/2003
R034917	REPAIR/RRF	5,000	03/01/2003

SALES DATA

OFF RECORD Number	DATE	TYPE INST	Q / U	V / I	RSN CD	SALE PRICE
1962/1206	2/06/2015	WD	Q	I	01	600,000
GRANTOR: HEARTSTILL RICHARD P						
GRANTEE: SARDO MARK R & CYNT						
1319/1973	5/25/2005	WD	Q	I		735,000
GRANTOR: BRYLEN HOMES LTD						
GRANTEE: HEARTSILL RICHARD E						

BUILDING NOTES

BUILDING DIMENSIONS

BAS=[YR=2005] W2 UOP=[YR=2005] N8 W14 S8 E14$ W14 FOP=[YR=2005] W9 S2 FST=[YR=2005] S6 E5 N6 W5$ E9 N2$ S2 W4 S6 W5 S16 FOP=[YR=2005] S13 E5 FGR=[YR=2005] E20 N20 W18 S2 W2 S18$ N13 W5$ E5 N5 E2 N2 E18 N17$ PTR=E15 FUS=[YR=2005] E25 S43 W25 N43$ W15$ PTR=N15 FUS=[YR=2005] N43 E1 N2 E10 UOP=[YR=2005] E1 N2 E9 S2 E2 S2 W12 N2$ S2 E14 S43 W8 UOP=[YR=2005] S4 W10 N4 E10$ W17$ S15$ PTR=N15 E45 UOP=[YR=2005] N16 BAS=[YR=2005] N12 E9 S12 W9$ E9 N12 W9 N3 E25 S31 W25$ W45 S15$.

EXTRA FEATURES

LN	OB/XF CODE	DESCRIPTION	BLD	CAP	L	W	UNITS	UT	Adj R	ADJ UNIT PRICE	ORIG COND	YEAR ON	YEAR ACTUAL	Q	% COND	OB/XF MKT VALUE	NOTES
1	0855	CONC PAVER	0	0	0	0	864.00	SF	10.00	10.00	100	2005	2005	3	86	7,430	
2	0855	CONC PAVER	0	0	0	0	47.00	SF	10.00	10.00	100	2005	2005	3	86	404	
3	0855	CONC PAVER	0	0	7	4	28.00	SF	10.00	10.00	100	2005	2005	3	86	241	
4	0410	ELEVATOR	0	0	0	0	1.00	UT	10,000.00	10,000.00	100	2005	2005	3	100	10,000	
5	0500	FP-PRE FAB	0	0	0	0	1.00	UT	3,500.00	3,500.00	100	2005	2005	3	89	3,115	

LAND DESCRIPTION

TOTAL OB/XF 21,190

LN	USE CODE	CLS	LAND USE DESCRIPTION	CAP	RD	LOC ZONE	FRONT	DEPTH	TOT LND UTS	UNIT TYPE	DT	DPTH FACT	% COND	TOT ADJ	UNIT PRICE	ADJ UNIT PRICE	LAND VALUE	OTHER ADJUSTMENTS AND NOTES	YEAR	DENSITY	DECL	FRZ	YR	CONSRV
1	000100	C	SFR	0		RG-1	0.00	0.00	1.00	UT		1.00	1.00	1.00	450,000.00	450,000.00	450,000							

REVIEW DATE 05/12/2019 BY KBA Total Acres: 0.00 Total Land Value: 450,000 Market: 0 Agricultural: 0 Common: 450,000 PRINTED 08/06/2024 BY SYS