LOT 3
IN OR 1794/1218
VICTORIA LANDING PB 6/86

EVANS ROBERT HENRY & MARTHA C REV TRUST
4935 VICTORIA LANDING CT
FERNANDINA BEACH, FL 32034

2024

00-00-30-087L-0003-0000

BUILDING CHARACTERISTICS

ELEMENT	CD	CONSTRUCTION
Exterior Wall	20	FACE BRICK 60
Exterior Wall	16	WD FR STUC 40
Roof Structur	08	IRREGULAR 100
Roof Cover	03	COMP SHNGL 100
Interior Wall	05	DRYWALL 100
Interior Floo	12	HARDWOOD 60
Interior Floo	14	CARPET 40
Air Condition	03	CENTRAL 100
Heating Type	04	AIR DUCTED 100
Bedrooms		4 100
Bathrooms		3.5 100
Frame	02	WOOD FRAME 100
Stories	2.	2. 100
Units		0 100
Occupancy	00	NONE 100
Quality	03	Quality Level 03
DOR CODE	0100	SINGLE FAMILY
MAP NUM		MKT AREA 03
NEIGHBORHOOD/LOC	3032.00	

AREA TYPE	TOTAL GROSS AREA	PCT OF BASE	TOT ADJ AREA	SUBAREA MARKET VALUE
BAS	941	100	941	98,568
BAS	2,916	100	2,916	305,445
FDS	143	75	107	11,208
FGR	872	55	480	50,279
FOP	52	30	16	1,676
FOP	378	30	113	11,836
FOP	487	30	146	15,293
PTO	20	5	1	104
UOP	54	20	11	1,152
UOP	142	20	28	2,933
TOTALS	6,519		4,862	509,285

MARKET ADJUSTMENTS

TYPE	MDL	EFF. AREA	TOT ADJ PTS	EFF. BASE RATE	REPL. COST NEW	AYB	EYB	ECON	FNCT		NORM	% COND
0900	01	4,862	96.3200	120.40	585,385	2003	2003	0	0	0	13.00	87.00

1 SNGL FAM – 100% - 2014 Heated Area: 3857 HX Base Yr 2014

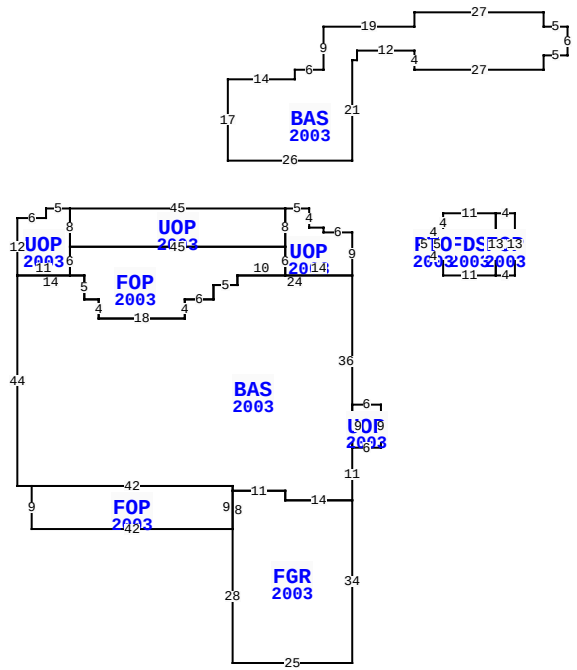

** This building has 12 Sub-Areas

4935 VICTORIA LANDING CT, FERNANDINA BEACH

BLD DATE		LGL DATE	
XF DATE		LAND DATE	04/03/2024 MLU
INC DATE		AG DATE	

EXTRA FEATURES

LN	OB/XF CODE	DESCRIPTION	BLD	CAP	L	W	UNITS	UT	Adj R	ADJ UNIT PRICE	ORIG COND	YEAR ON	YEAR ACTUAL	Q	% COND	OB/XF MKT VALUE	NOTES
1	0500	FP-PRE FAB	0	100	0	0	1.00	UT	3,500.00	3,500.00	100	2003	2003	3	87	3,045	
2	0812	CONCRETE C	0	100	0	0	3,072.00	SF	4.00	4.00	100	2003	2003	3	83	10,199	
3	0810	CONCRETE A	0	100	0	0	130.00	SF	6.50	6.50	100	2003	2003	3	83	701	
4	0825	BRICK	0	100	0	0	258.00	SF	12.50	12.50	100	2003	2003	3	95	3,064	
5	0825	BRICK	0	100	0	0	25.00	SF	12.50	12.50	100	2003	2003	3	95	297	
6	1127	BRICK 8"	0	100	0	0	70.00	SF	11.00	11.00	100	2003	2003	3	95	732	
7	0462	ST/AL FNC	0	100	0	0	2,601.00	SF	10.00	10.00	100	2003	2003	3	32	8,323	
8	0911	SCRN RM A	0	100	45	8	360.00	SF	17.50	17.50	100	2004	2004	3	22	1,386	

NASSAU COUNTY PROPERTY

PAGE 1 of 1 8

VALUATION SUMMARY

VALUATION BY		STANDARD
Tax Group: 8	Tax Dist:	
BUILDING MARKET VALUE		509,285
TOTAL MARKET OB/XF VALUE		27,747
TOTAL LAND VALUE - MARKET		200,000
TOTAL MARKET VALUE		737,032
SOH/AGL Deduction		395,094
ASSESSED VALUE		341,938
TOTAL EXEMPTION VALUE	HX HB	50,000
BASE TAXABLE VALUE		291,938
TOTAL JUST VALUE		737,032
NCON VALUE		0
INCOME VALUE		
PREVIOUS YEAR MKT VALUE		666,559

PERMIT NUM	DESCRIPTION	AMT	ISSUED
B0412464	XFOB	6,759	03/01/2004
R035104	REPAIR/RRF	7,000	05/01/2003
R035105	REPAIR/RRF	900	05/01/2003
B0210303	XFOB	5,900	10/01/2002
B0210176	NEW CONSTR	400,000	09/01/2002

SALES DATA

OFF RECORD Number	DATE	TYPE INST	Q / U	V / I	RSN CD	SALE PRICE
1794/1218	5/11/2012	WD	U	I	30	100
GRANTOR: EVANS ROBERT & MARTHA						
GRANTEE: THE ROBERT HENRY EV						
1794/1216	5/11/2012	WD	U	I	38	465,000
GRANTOR: FLYNN JOHN R & MARILY						
GRANTEE: EVANS ROBERT & MART						

BUILDING NOTES

BUILDING DIMENSIONS

BAS=[YR=2003;ORIG=-70,9] S44 E3 E42 S1 E11 S2 E14 N11 N36 W24 S2 W5 S3 W6 S4 W18 N4 W3 N5 W14 $
BAS=[YR=2003;ORIG=0,-15] N21 E1 N2 E12 S4 E27 N3 E5 N6 W5 N3 W27 S3 W19 S9 W6 S2 W14 S17 E26 $
FGR=[YR=2003;ORIG=-25,62] S28 E25 N34 W14 N2 W11 S8 $
FOP=[YR=2003;ORIG=-14,3] W45 S6 E3 S5 E3 S4 E18 N4 E6 N3 E5 N2 E10 N6 $
FOP=[YR=2003;ORIG=-67,53] S9 E42 N9 W42 $
UOP=[YR=2003;ORIG=-14,-5] W45 S8 E45 N8 $
UOP=[YR=2003;ORIG=0,0] W6 N1 W3 N4 W5 S8 S6 E14 N9 $
FDS=[YR=2003;ORIG=19,0] N4 E11 S13 W11 N9 $
UOP=[YR=2003;ORIG=-59,3] N8 W5 S2 W6 S12 E11 N6 $

LAND DESCRIPTION

TOTAL OB/XF 27,747

LN	USE CODE	CLS	LAND USE DESCRIPTION	CAP	RD	LOC ZONE	FRONT	DEPTH	TOT LND UTS	UNIT TYPE	DT	DPTH FACT	% COND	TOT ADJ	UNIT PRICE	ADJ UNIT PRICE	LAND VALUE	OTHER ADJUSTMENTS AND NOTES	YEAR	DENSITY	DECL	FRZ	YR	CONSRV
1	000100	C	SFR	100		RSF-1	0.00	0.00	1.00	LT		1.00	1.00	1.00	200,000.00	200,000.00	200,000							

REVIEW DATE 05/12/2019 BY KBA Total Acres: 0.00 Total Land Value: 200,000 Market: 0 Agricultural: 0 Common: 200,000 PRINTED 08/06/2024 BY SYS