LOT 34
IN OR 1189/346
TIDEWATER @ OCEAN REACH #1

WILLIAMS LAWRENCE E & MELINDA
2754 EASTWIND DR
FERNANDINA BEACH, FL 32034

2024

00-00-30-085T-0034-0000

BUILDING CHARACTERISTICS

ELEMENT	CD	CONSTRUCTION
Exterior Wall	05	AVERAGE 70
Exterior Wall	16	WD FR STUC 30
Roof Structur	03	GABLE/HIP 100
Roof Cover	03	COMP SHNGL 100
Interior Wall	05	DRYWALL 100
Interior Floo	14	CARPET 80
Interior Floo	08	SHT VINYL 20
Air Condition	03	CENTRAL 100
Heating Type	04	AIR DUCTED 100
Bedrooms		4 100
Bathrooms		2 100
Frame	02	WOOD FRAME 100
Stories	1.	1. 100
Units		0 100
Occupancy	00	NONE 100
Quality	06	Quality Level 06
DOR CODE	0100	SINGLE FAMILY
MAP NUM		MKT AREA 02
NEIGHBORHOOD/LOC	2031.00	

AREA TYPE	TOTAL GROSS AREA	PCT OF BASE	TOT ADJ AREA	SUBAREA MARKET VALUE
BAS	2,126	100	2,126	277,507
FGR	436	55	240	31,327
FOP	48	30	14	1,828
FSP	264	40	106	13,837
TOTALS	2,874		2,486	324,497

MARKET ADJUSTMENTS

TYPE	MDL	EFF. AREA	TOT ADJ PTS	EFF. BASE RATE	REPL. COST NEW	AYB	EYB	ECON	FNCT		NORM	% COND
0900	01	2,486	115.8096	144.76	359,873	1997	2003	0	0	0	9.83	90.17

1 SNGL FAM – 100% - 2004 Heated Area: 2126 HX Base Yr 2004

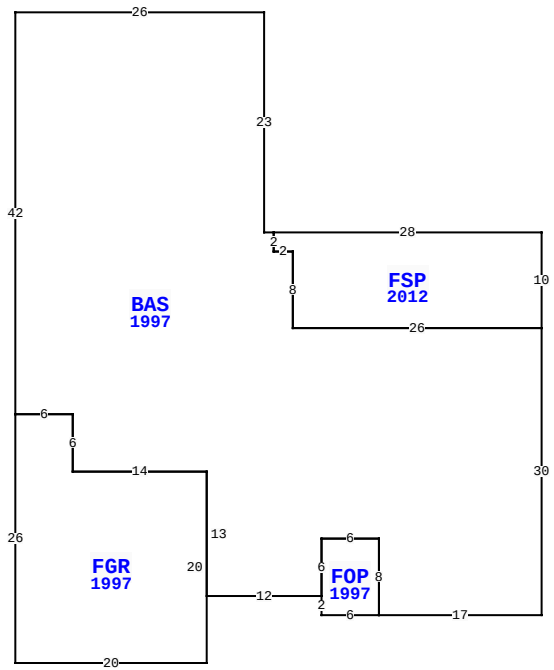

2754 EASTWIND DR, FERNANDINA BEACH

BLD DATE		LGL DATE	
XF DATE		LAND DATE	03/13/2024 MLU
INC DATE		AG DATE	

NASSAU COUNTY PROPERTY

PAGE 1 of 1 8

VALUATION SUMMARY

VALUATION BY		STANDARD
Tax Group: 8	Tax Dist:	
BUILDING MARKET VALUE		324,497
TOTAL MARKET OB/XF VALUE		5,624
TOTAL LAND VALUE - MARKET		250,000
TOTAL MARKET VALUE		580,121
SOH/AGL Deduction		316,940
ASSESSED VALUE		263,181
TOTAL EXEMPTION VALUE	HX HB VX	55,000
BASE TAXABLE VALUE		208,181
TOTAL JUST VALUE		580,121
NCON VALUE		0
INCOME VALUE		
PREVIOUS YEAR MKT VALUE		495,715

PERMIT NUM	DESCRIPTION	AMT	ISSUED
B9603419	NEW CONSTR	104,900	10/01/1996

SALES DATA

OFF RECORD Number	DATE	TYPE INST	Q U /	V I /	RSN CD	SALE PRICE
1189/0346	11/18/2003	WD	Q	I		234,500
GRANTOR: O'HAGAN MICHAEL K & S						
GRANTEE: WILLIAMS LAWRENCE E						
0913/1269	12/30/1999	WD	Q	I		166,500
GRANTOR: YEOMAN GEORGE T & PAM						
GRANTEE: O'HAGAN MICHAEL K &						

BUILDING NOTES

BUILDING DIMENSIONS

FSP=[YR=2012] W28 BAS=[YR=1997] W1 N23 W26 S42 FGR=[YR=1997] S26 E20 N20 W14 N6 W6 $ E6 S6 E14 S13 E12 FOP=[YR=1997] S2 E6 N8 W6 S6 $ N6 E6 S8 E17 N30 W26 N8 W2 N2 $ S2 E2 S8 E26 N10 $.

EXTRA FEATURES

LN	OB/XF CODE	DESCRIPTION	BLD	CAP	L	W	UNITS	UT	Adj R	ADJ UNIT PRICE	ORIG COND	YEAR ON	YEAR ACTUAL	Q	% COND	OB/XF MKT VALUE	NOTES
1	0500	FP-PRE FAB	0	100	0	0	1.00	UT	3,500.00	3,500.00	100	1997	1997	3	80	2,800	
2	0811	CONCRETE B	0	100	0	0	744.00	SF	5.20	5.20	100	1997	1997	3	73	2,824	

LAND DESCRIPTION

TOTAL OB/XF 5,624

LN	USE CODE	CLS	LAND USE DESCRIPTION	CAP	RD	LOC ZONE	FRONT	DEPTH	TOT LND UTS	UNIT TYPE	DT	DPTH FACT	% COND	TOT ADJ	UNIT PRICE	ADJ UNIT PRICE	LAND VALUE	OTHER ADJUSTMENTS AND NOTES	YEAR	DENSITY	DECL	FRZ	YR	CONSRV
1	000100	C	SFR	100		RSF-2	0.00	0.00	1.00	LT		1.00	1.00	1.00	250,000.00	250,000.00	250,000							

REVIEW DATE 08/02/2022 BY KBA Total Acres: 0.00 Total Land Value: 250,000 Market: 0 Agricultural: 0 Common: 250,000 PRINTED 08/06/2024 BY SYS