LOT 23 IN OR 2009/883
TIDEWATER @ OCEAN REACH #1
PB 6/46

DANIELS MOLLY DRESSER
2761 EASTWIND DR
FERNANDINA BEACH, FL 32034

2024

00-00-30-085T-0023-0000

BUILDING CHARACTERISTICS

ELEMENT	CD	CONSTRUCTION
Exterior Wall	05	AVERAGE 70
Exterior Wall	16	WD FR STUC 30
Roof Structur	03	GABLE/HIP 100
Roof Cover	03	COMP SHNGL 100
Interior Wall	05	DRYWALL 100
Interior Floo	14	CARPET 80
Interior Floo	11	CLAY TILE 20
Air Condition	03	CENTRAL 100
Heating Type	04	AIR DUCTED 100
Bedrooms		4 100
Bathrooms		2 100
Frame	02	WOOD FRAME 100
Stories	1.	1. 100
Units		0 100
Occupancy	00	NONE 100
Quality	06	Quality Level 06
DOR CODE	0100	SINGLE FAMILY
MAP NUM		MKT AREA 02
NEIGHBORHOOD/LOC	2031.00	

AREA TYPE	TOTAL GROSS AREA	PCT OF BASE	TOT ADJ AREA	SUBAREA MARKET VALUE
BAS	2,126	100	2,126	282,263
FGR	436	55	240	31,865
FOP	52	30	16	2,124
FSP	124	40	50	6,638
TOTALS	2,738		2,432	322,890

MARKET ADJUSTMENTS

TYPE	MDL	EFF. AREA	TOT ADJ PTS	EFF. BASE RATE	REPL. COST NEW	AYB	EYB	ECON	FNCT		NORM	% COND
0900	01	2,432	121.1525	151.44	368,302	1998	1998	0	0	0	12.33	87.67

1 SNGL FAM – 100% - 2016 Heated Area: 2126 HX Base Yr 2016

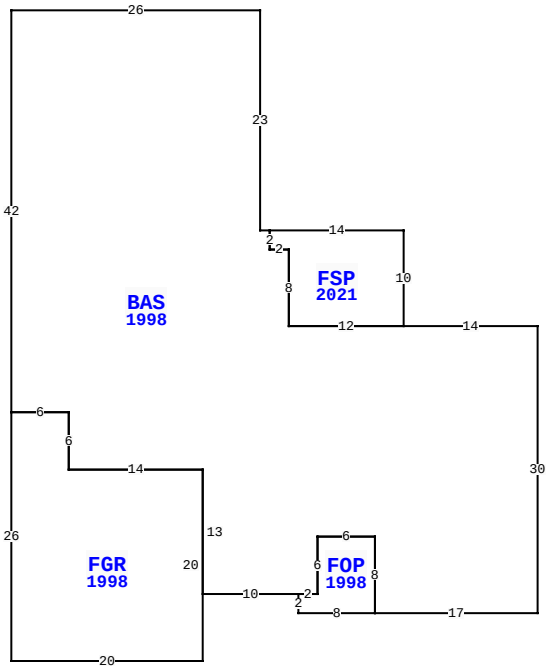

2761 EASTWIND DR, FERNANDINA BEACH

BLD DATE		LGL DATE	
XF DATE		LAND DATE	03/13/2024 MLU
INC DATE		AG DATE	

NASSAU COUNTY PROPERTY

PAGE 1 of 1 8

VALUATION SUMMARY

VALUATION BY		STANDARD
Tax Group: 8	Tax Dist:	
BUILDING MARKET VALUE		322,890
TOTAL MARKET OB/XF VALUE		6,248
TOTAL LAND VALUE - MARKET		250,000
TOTAL MARKET VALUE		579,138
SOH/AGL Deduction		268,133
ASSESSED VALUE		311,005
TOTAL EXEMPTION VALUE	HX HB	50,000
BASE TAXABLE VALUE		261,005
TOTAL JUST VALUE		579,138
NCON VALUE		0
INCOME VALUE		
PREVIOUS YEAR MKT VALUE		494,908

PERMIT NUM	DESCRIPTION	AMT	ISSUED
20010876	ADDITION	0	01/01/2021
B9805085	NEW CONSTR	104,900	06/01/1998

SALES DATA

OFF RECORD Number	DATE	TYPE INST	Q U /	V I /	RSN CD	SALE PRICE
2009/0883	10/16/2015	WD	Q	I	01	330,000
GRANTOR: MILLER DOUGLAS A & DE						
GRANTEE: DANIELS MOLLY DRESS						
0850/1778	10/01/1998	WD	Q	I		140,900
GRANTOR: PANITZ HOMES						
GRANTEE: MILLER DOUGLAS ALLE						

BUILDING NOTES

BUILDING DIMENSIONS

BAS=[YR=1998] W14 FSP=[YR=2021] N10 W14 S2 E2 S8 E12 $ W12 N8 W2 N2 W1 N23 W26 S42 FGR=[YR=1998] S26 E20 N20 W14 N6 W6 $ E6 S6 E14 S13 E10 FOP=[YR=1998] S2 E8 N8 W6 S6 W2 $ E2 N6 E6 S8 E17 N30 $.

EXTRA FEATURES

LN	OB/XF CODE	DESCRIPTION	BLD	CAP	L	W	UNITS	UT	Adj R	ADJ UNIT PRICE	ORIG COND	YEAR ON	YEAR ACTUAL	Q	% COND	OB/XF MKT VALUE	NOTES
1	0500	FP-PRE FAB	0	100	0	0	1.00	UT	3,500.00	3,500.00	100	1998	1998	3	81	2,835	
2	0810	CONCRETE A	0	100	0	0	625.00	SF	6.50	6.50	100	1998	1998	3	75	3,047	
3	0810	CONCRETE A	0	100	25	3	75.00	SF	6.50	6.50	100	1998	1998	3	75	366	

LAND DESCRIPTION

TOTAL OB/XF 6,248

LN	USE CODE	CLS	LAND USE DESCRIPTION	CAP	RD	LOC ZONE	FRONT	DEPTH	TOT LND UTS	UNIT TYPE	DT	DPTH FACT	% COND	TOT ADJ	UNIT PRICE	ADJ UNIT PRICE	LAND VALUE	OTHER ADJUSTMENTS AND NOTES	YEAR	DENSITY	DECL	FRZ	YR	CONSRV
1	000100	C	SFR	100		RSF-2	0.00	0.00	1.00	LT		1.00	1.00	1.00	250,000.00	250,000.00	250,000							

REVIEW DATE 12/13/2021 BY DJ Total Acres: 0.00 Total Land Value: 250,000 Market: 0 Agricultural: 0 Common: 250,000 PRINTED 08/06/2024 BY SYS