PT OF LOT 5 IN OR 1625/1970 &
PT GOVT LOT 2 SEC 16-2N-28E
BEING SOVEREIGNTY SUBMERGED

FEY CAROL S TRUSTEE
1205 MANUCY RD
FERNANDINA BEACH, FL 32034

2024

00-00-30-0760-0005-0060

NASSAU COUNTY PROPERTY

BUILDING CHARACTERISTICS

ELEMENT	CD	CONSTRUCTION
Exterior Wall	10	ABOVE AVG 100
Roof Structur	08	IRREGULAR 100
Roof Cover	11	SLATE 100
Interior Wall	05	DRYWALL 100
Interior Floo	12	HARDWOOD 60
Interior Floo	14	CARPET 40
Air Condition	03	CENTRAL 100
Heating Type	04	AIR DUCTED 100
Bedrooms		4 100
Bathrooms		3.5 100
Frame	02	WOOD FRAME 100
Stories	2.	2. 100
Units		0 100
BUD8 Adjustme	05	DIST 1A 100
Quality	04	Quality Level 04
DOR CODE	0100	SINGLE FAMILY
MAP NUM		MKT AREA 03
NEIGHBORHOOD/LOC	3027.00	

AREA TYPE	TOTAL GROSS AREA	PCT OF BASE	TOT ADJ AREA	SUBAREA MARKET VALUE
BAS	2,536	100	2,536	513,278
FOP	55	30	16	3,238
FOP	64	30	19	3,846
FSP	384	40	154	31,169
FUS	1,272	100	1,272	257,449
STP	24	10	2	405
STP	32	10	3	607
STP	33	10	3	607
STR	75	10	8	1,620
UAT	192	10	19	3,846
TOTALS	5,333		4,137	837,316

MARKET ADJUSTMENTS

TYPE	MDL	EFF. AREA	TOT ADJ PTS	EFF. BASE RATE	REPL. COST NEW	AYB	EYB	ECON	FNCT		NORM	% COND
0500	11	4,137	140.5536	210.83	872,204	2014	2014	0	0	0	4.00	96.00

1 SFR CUST – 100% - 2016 Heated Area: 3808 HX Base Yr 2016

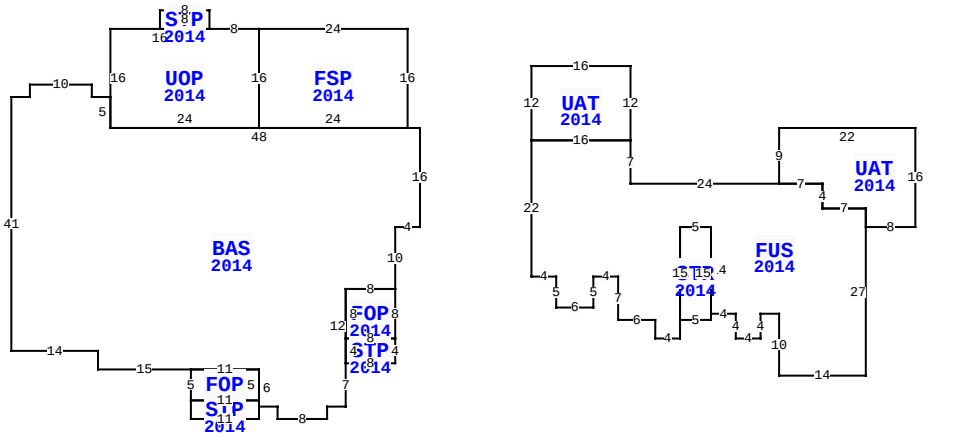

** This building has 12 Sub-Areas

1205 MANUCY RD, FERNANDINA BEACH

BLD DATE	01/15/2008 DJ	LGL DATE	
XF DATE		LAND DATE	
INC DATE		AG DATE	

VALUATION SUMMARY

VALUATION BY		STANDARD
Tax Group: 8	Tax Dist:	
BUILDING MARKET VALUE		868,864
TOTAL MARKET OB/XF VALUE		67,416
TOTAL LAND VALUE - MARKET		1,068,000
TOTAL MARKET VALUE		2,004,280
SOH/AGL Deduction		501,752
ASSESSED VALUE		1,502,528
TOTAL EXEMPTION VALUE	HX HB	50,000
BASE TAXABLE VALUE		1,452,528
TOTAL JUST VALUE		2,004,280
NCON VALUE		0
INCOME VALUE		
PREVIOUS YEAR MKT VALUE		1,968,791

PERMIT NUM	DESCRIPTION	AMT	ISSUED
B1328066	CO ISSUED	0	11/13/2014
B1429038	SWIM POOL	0	07/09/2014
B1429038	SWIM POOL	28,000	07/01/2014
B1328066	NEW CONSTR	420,855	12/01/2013
B1327968	DEMO	18,000	11/01/2013
M16054	H/AC	0	04/01/2011

SALES DATA

OFF RECORD Number	DATE	TYPE INST	Q U	V I	RSN CD	SALE PRICE
1841/1854	1/22/2013	MS	U	I	18	100
GRANTOR: TIIF OF STATE OF FLOR						
GRANTEE: FEY CAROL S TRUST						
1625/1970	6/16/2009	WD	Q	I	01	1,500,000
GRANTOR: COBB JAMES H III						
GRANTEE: FEY CAROL S TRUSTEE						

BUILDING NOTES

BUILDING DIMENSIONS

BAS=[YR=2014] W2 FSP=[YR=2014] N16 W24 UOP=[YR=2014] W8 STP=[YR=2014] N3 W8 S3 E8 $ W16 S16 E24 N16$ S16 E24$ W48 N5 W3 N2 W10 S2 W3 S41 E14 S3 E15 FOP=[YR=2014] S5 STP=[YR=2014] S3 E11 N3 W11$ E11 N5 W11$ E11 S6 E3 S2 E8 N2 E3 N7 STP=[YR=2014] E8 N4 FOP=[YR=2014] N8 W8 S8 E8$ W8 S4$ N12 E8 N10 E4 N16$ PTR=E80 UAT=[YR=2014] W22 S9 FUS=[YR=2014] W24 N7 UAT=[YR=2014] N12 W16 S12 E16$ W16 S22 E4 S5 E6 N5 E4 S7 E6 S3 E4 N3 STR=[YR=2014] E5 N15 W5 S15$ N15 E5 S14 E4 S4 E4 N4 E3 S10 E14 N27 W7 N4 W7$ E7 S4 E7 S3 E8 N16$ W80$.

EXTRA FEATURES

LN	OB/XF CODE	DESCRIPTION	BLD	CAP	L	W	UNITS	UT	Adj R	ADJ UNIT PRICE	ORIG COND	YEAR ON	YEAR ACTUAL	Q	% COND	OB/XF MKT VALUE	NOTES
1	0300	BOAT DCK W	0	100	0	0	1,489.00	SF	40.00	40.00	100	1997	1997	3	25	14,890	
2	0940	SHEDS/PORT	0	100	8	10	80.00	SF	30.00	30.00	100	1997	1997	3	20	480	
3	0920	CWALL-WD/M	0	100	0	0	141.00	LF	390.00	390.00	100	1997	1997	3	20	10,998	
4	0810	CONCRETE A	0	100	6	4	24.00	SF	6.50	6.50	100	1997	1997	3	73	114	
5	0322	BOAT LFT L	0	100	0	0	2.00	UT	1,500.00	1,500.00	100	1997	1997	3	20	600	
6	0803	ASPHALT C	0	100	0	0	4,276.00	SF	2.00	2.00	100	2001	2001	3	50	4,276	
7	0810	CONCRETE A	0	100	0	0	228.00	SF	6.50	6.50	100	2002	2002	3	82	1,215	
8	0812	CONCRETE C	0	100	0	0	2,858.00	SF	4.00	4.00	100	2007	2007	3	88	10,060	
9	0350	CARPORT WD	0	100	0	0	504.00	SF	13.00	13.00	100	2013	2013	3	60	3,931	
10	0462	ST/AL FNC	0	100	0	0	690.00	SF	10.00	10.00	100	2014	2014	3	75	5,175	

TOTAL OB/XF 51,739

LAND DESCRIPTION

LN	USE CODE	CLS	LAND USE DESCRIPTION	CAP	RD	LOC ZONE	FRONT	DEPTH	TOT LND UTS	UNIT TYPE	DT	DPTH FACT	% COND	TOT ADJ	UNIT PRICE	ADJ UNIT PRICE	LAND VALUE	OTHER ADJUSTMENTS AND NOTES	YEAR	DENSITY	DECL	FRZ	YR	CONSRV
1	000132	C	SFR RIVER	100		RSF-1	102.00	255.00	102.00	FF		1.00	1.00	1.20	7,500.00	9,000.00	918,000							
2	000100	C	SFR	100		RSF-1	100.00	210.00	1.00	UT		1.00	1.00	1.20	125,000.00	150,000.00	150,000							

REVIEW DATE 01/31/2024 BY KBA Total Acres: 0.00 Total Land Value: 1,068,000 Market: 0 Agricultural: 0 Common: 1,068,000 PRINTED 08/06/2024 BY SYS

PT OF LOT 5 IN OR 1625/1970 &
PT GOVT LOT 2 SEC 16-2N-28E
BEING SOVEREIGNTY SUBMERGED

FEY CAROL S TRUSTEE
1205 MANUCY RD
FERNANDINA BEACH, FL 32034

2024

00-00-30-0760-0005-0060

NASSAU COUNTY PROPERTY

BUILDING CHARACTERISTICS

ELEMENT	CD	CONSTRUCTION
Exterior Wall	05	AVERAGE 100
Roof Structur	03	GABLE/HIP 100
Roof Cover	03	COMP SHNGL 100
Interior Wall	05	DRYWALL 100
Interior Floo	03	CONC FINSH 100
Air Condition	99	N/A 100
Heating Type		N/A 100
Bedrooms		0 100
Bathrooms		1 100
Frame	02	WOOD FRAME 100
Stories	1.	1. 100
Units		0 100
Occupancy	00	NONE 100
Quality	04	Quality Level 04

DOR CODE	0100	SINGLE FAMILY	
MAP NUM		MKT AREA	03
NEIGHBORHOOD/LOC	3027.00		

AREA TYPE	TOTAL GROSS AREA	PCT OF BASE	TOT ADJ AREA	SUBAREA MARKET VALUE
APT	458	100	458	10,751
BAL	116	15	17	399
BAS	864	100	864	20,280
STR	52	10	5	118
TOTALS	1,490		1,344	31,548

MARKET ADJUSTMENTS

TYPE	MDL	EFF. AREA	TOT ADJ PTS	EFF. BASE RATE	REPL. COST NEW	AYB	EYB	ECON	FNCT		NORM	% COND
6500	01	1,344	90.6360	31.72	42,632	2002	2005	0	0	0	26.00	74.00

2 GARAGE RES – 100% - 2016 Heated Area: 1322 HX Base Yr 2016

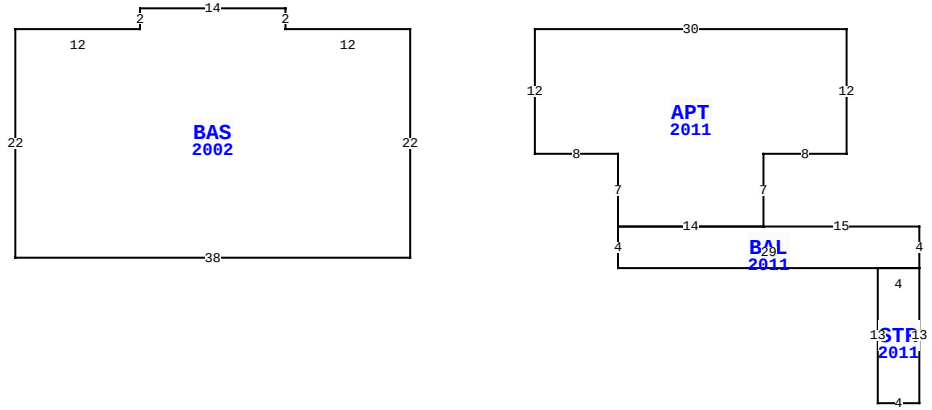

BLD DATE	01/15/2008 DJ	LGL DATE	
XF DATE		LAND DATE	
INC DATE		AG DATE	

1205 MANUCY RD, FERNANDINA BEACH

VALUATION SUMMARY

VALUATION BY		STANDARD
Tax Group: 8	Tax Dist:	
BUILDING MARKET VALUE		868,864
TOTAL MARKET OB/XF VALUE		67,416
TOTAL LAND VALUE - MARKET		1,068,000
TOTAL MARKET VALUE		2,004,280
SOH/AGL Deduction		501,752
ASSESSED VALUE		1,502,528
TOTAL EXEMPTION VALUE	HX HB	50,000
BASE TAXABLE VALUE		1,452,528
TOTAL JUST VALUE		2,004,280
NCON VALUE		0
INCOME VALUE		
PREVIOUS YEAR MKT VALUE		1,968,791

PERMIT NUM	DESCRIPTION	AMT	ISSUED
B24498	REMODEL	87,000	03/01/2011
P14697	OTHER	0	03/01/2011
B19973	REMODEL	5,800	05/01/2007
B0210407	GARAGE	30,096	10/01/2002
8764	REPAIR/RRF	3,025	03/16/1993

SALES DATA

OFF RECORD Number	DATE	TYPE INST	Q / U	V / I	RSN CD	SALE PRICE
1841/1854	1/22/2013	MS	U	I	18	100
GRANTOR: TIIF OF STATE OF FLOR						
GRANTEE: FEY CAROL S TRUST						
1625/1970	6/16/2009	WD	Q	I	01	1,500,000
GRANTOR: COBB JAMES H III						
GRANTEE: FEY CAROL S TRUSTEE						

BUILDING NOTES

EXTRA FEATURES

LN	OB/XF CODE	DESCRIPTION	BLD	CAP	L	W	UNITS	UT	Adj R	ADJ UNIT PRICE	ORIG COND	YEAR ON	YEAR ACTUAL	Q	% COND	OB/XF MKT VALUE	NOTES
11	1127	BRICK 8"	0	100	0	0	710.00	SF	11.00	11.00	100	2014	2014	3	98	7,654	
12	0811	CONCRETE B	0	100	0	0	944.00	SF	5.20	5.20	100	2014	2014	3	95	4,663	
13	0500	FP-PRE FAB	0	100	0	0	1.00	UT	3,500.00	3,500.00	100	2014	2014	3	96	3,360	

BUILDING DIMENSIONS

BAS=[YR=2002] S22 E38 N22 W12 N2 W14 S2 W12$ PTR=E50
APT=[YR=2011] E30 S12 W8 S7 BAL=[YR=2011] E15 S4
STR=[YR=2011] S13 W4 N13 E4$ W29 N4 E14$ W14 N7 W8 N12$ W50$.

LAND DESCRIPTION

TOTAL OB/XF 15,677

LN	USE CODE	CLS	LAND USE DESCRIPTION	CAP	RD	LOC ZONE	FRONT	DEPTH	TOT LND UTS	UNIT TYPE	DT	DPTH FACT	% COND	TOT ADJ	UNIT PRICE	ADJ UNIT PRICE	LAND VALUE	OTHER ADJUSTMENTS AND NOTES	YEAR	DENSITY	DECL	FRZ	YR	CONSRV

REVIEW DATE 01/31/2024 BY KBA Total Acres: 0.00 Total Land Value: 1,068,000 Market: 0 Agricultural: 0 Common: 1,068,000 PRINTED 08/06/2024 BY SYS