W580 FT OF S80 FT OF N160 FT
OF LOT 5 OR 2716/755
SUB OF SO PT SEC 12 DB 39/292

LOHMAN FAMILY TRUST/LOHMAN THOMAS F TRUSTEE
4921 SUAREZ BLUFF ROAD
FERNANDINA BEACH, FL 32034

2024

00-00-30-0760-0005-0040

NASSAU COUNTY PROPERTY

BUILDING CHARACTERISTICS

ELEMENT	CD	CONSTRUCTION
Exterior Wall	17	CB STUCCO 60
Exterior Wall	16	WD FR STUC 40
Roof Structur	03	GABLE/HIP 100
Roof Cover	12	MODULAR MT 100
Interior Wall	05	DRYWALL 100
Interior Floo	09	PINE WOOD 100
Air Condition	03	CENTRAL 100
Heating Type	04	AIR DUCTED 100
Bedrooms		3 100
Bathrooms		4 100
Frame	02	WOOD FRAME 100
Stories	2.	2. 100
Units		0 100
BUD8 Adjustme	05	DIST 1A 100
Occupancy	00	NONE 100
Quality	03	Quality Level 03
DOR CODE	0100	SINGLE FAMILY
MAP NUM		MKT AREA 03
NEIGHBORHOOD/LOC	3027.00	

AREA TYPE	TOTAL GROSS AREA	PCT OF BASE	TOT ADJ AREA	SUBAREA MARKET VALUE
BAS	1,416	100	1,416	114,211
BAS	64	100	64	5,162
BAS	88	100	88	7,098
BAS	200	100	200	16,131
BAS	286	100	286	23,068
DCK	28	10	3	242
DCK	28	10	3	242
DCK	132	10	13	1,049
FGR	754	55	415	33,473
FOP	40	30	12	967
TOTALS	4,990		3,859	311,257

MARKET ADJUSTMENTS

TYPE	MDL	EFF. AREA	TOT ADJ PTS	EFF. BASE RATE	REPL. COST NEW	AYB	EYB	ECON	FNCT		NORM	% COND
0100	01	3,859	94.8600	90.12	347,773	1988	2002	0	0	0	10.50	89.50

1 SINGLE FAM – 100% - 2006 Heated Area: 3058 HX Base Yr 2006

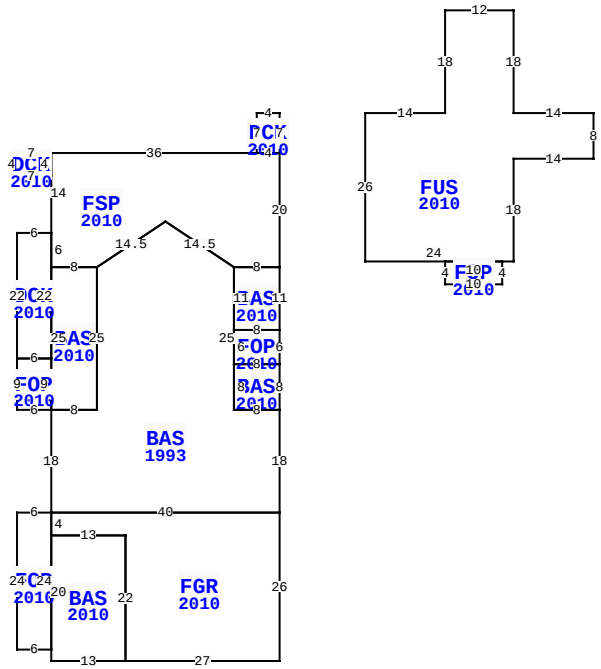

** This building has 15 Sub-Areas

4921 SUAREZ BLUFF RD, FERNANDINA BEACH

BLD DATE		LGL DATE	
XF DATE		LAND DATE	
INC DATE		AG DATE	

VALUATION SUMMARY

VALUATION BY		STANDARD
Tax Group: 8	Tax Dist:	
BUILDING MARKET VALUE		311,257
TOTAL MARKET OB/XF VALUE		89,869
TOTAL LAND VALUE - MARKET		750,000
TOTAL MARKET VALUE		1,151,126
SOH/AGL Deduction		295,793
ASSESSED VALUE		855,333
TOTAL EXEMPTION VALUE	HX HB	50,000
BASE TAXABLE VALUE		805,333
TOTAL JUST VALUE		1,151,126
NCON VALUE		0
INCOME VALUE		
PREVIOUS YEAR MKT VALUE		1,138,687

PERMIT NUM	DESCRIPTION	AMT	ISSUED
B1428693	SWIM POOL	27,760	04/01/2014
M14208	H/AC	0	10/01/2008
B21497	ADDITION	250,000	06/01/2008
B874305	N/A	2,045	06/17/1987

SALES DATA

OFF RECORD Number	DATE	TYPE INST	Q / U	V / I	RSN CD	SALE PRICE
2716/755	4/16/2024	WD	U	I	11	100
GRANTOR: LOHMAN THOMAS F & SHI						
GRANTEE: LOHMAN FAMILY TRUST						
1365/1502	11/08/2005	WD	U	I	01	100
GRANTOR: LOHMAN THOMAS & FLOYD						
GRANTEE: LOHMAN THOMAS F & S						

BUILDING NOTES

BUILDING DIMENSIONS

DCK=[YR=2010] W4 S7 FSP=[YR=2010] W36 DCK=[YR=2010] W7 S4 E7 N4 $ S14 DCK=[YR=2010] W6 S22 FOP=[YR=2010] S9 E6 BAS=[YR=2010] E8 N25 W8 S25 $ N9 W6 $ E6 N22 $ S6 E8 BAS=[YR=1993] S25 W8 S18 FOP=[YR=2010] W6 S24 E6 BAS=[YR=2010] S2 E13 FGR=[YR=2010] E27 N26 W40 S4 E13 S22 $ N22 W13 S20 $ N24 $ E40 N18 BAS=[YR=2010] N8 FOP=[YR=2010] N6 BAS=[YR=2010] N11 W8 S11 E8 $ W8 S6 E8 $ W8 S8 E8 $ W8 N25 L12 U8 D8 L12 $ R12 U8 D8 R12 E8 N20 W4 $ E4 N7$ PTR= E15 FUS=[YR=2010] E14 N18 E12 S18 E14 S8 W14 S18 W2 FOP=[YR=2010] S4 W10 N4 E10 $ W24 N26 $ W15 $.

EXTRA FEATURES

LN	OB/XF CODE	DESCRIPTION	BLD	CAP	L	W	UNITS	UT	Adj R	ADJ UNIT PRICE	ORIG COND	YEAR ON	YEAR ACTUAL	Q	% COND	OB/XF MKT VALUE	NOTES
1	0510	GARAGE WD-	0	100	26	32	832.00	SF	35.00	35.00	100	1983	1983	3	20	5,824	
2	0940	SHEDS/PORT	0	100	12	6	72.00	SF	30.00	30.00	100	1995	1995	3	20	432	
3	0810	CONCRETE A	0	100	32	6	192.00	SF	6.50	6.50	100	1983	1983	3	41	512	
4	0940	SHEDS/PORT	0	100	20	10	200.00	SF	30.00	30.00	100	1995	1995	3	20	1,200	
5	0350	CARPORT WD	0	100	20	7	140.00	SF	13.00	13.00	100	1995	1995	3	20	364	
6	0940	SHEDS/PORT	0	100	0	0	136.00	SF	30.00	30.00	100	2000	2000	3	20	816	
7	0300	BOAT DCK W	0	100	0	0	911.00	SF	40.00	40.00	100	1995	1995	3	23	8,381	
8	0303	FLT DOCK W	0	100	18	10	180.00	SF	26.00	26.00	100	1995	1995	3	23	1,076	
9	0310	AL GANG WY	0	100	0	0	20.00	LF	115.00	115.00	100	2000	2000	3	20	460	
10	0322	BOAT LFT L	0	100	0	0	2.00	UT	1,500.00	1,500.00	100	2000	2000	3	20	600	

TOTAL OB/XF 19,665

LAND DESCRIPTION

LN	USE CODE	CLS	LAND USE DESCRIPTION	CAP	RD	LOC ZONE	FRONT	DEPTH	TOT LND UTS	UNIT TYPE	DT	DPTH FACT	% COND	TOT ADJ	UNIT PRICE	ADJ UNIT PRICE	LAND VALUE	OTHER ADJUSTMENTS AND NOTES	YEAR	DENSITY	DECL	FRZ	YR	CONSRV
1	000132	C	SFR RIVER	100		RSF-1	80.00	565.00	80.00	FF		1.00	1.00	1.25	7,500.00	9,375.00	750,000							

REVIEW DATE 01/31/2024 BY KBA Total Acres: 0.00 Total Land Value: 750,000 Market: 0 Agricultural: 0 Common: 750,000 PRINTED 08/06/2024 BY SYS

W580 FT OF S80 FT OF N160 FT
OF LOT 5 OR 2716/755
SUB OF SO PT SEC 12 DB 39/292

LOHMAN FAMILY TRUST/LOHMAN THOMAS F TRUSTEE
4921 SUAREZ BLUFF ROAD
FERNANDINA BEACH, FL 32034

2024

00-00-30-0760-0005-0040

NASSAU COUNTY PROPERTY

BUILDING CHARACTERISTICS

ELEMENT	CD	CONSTRUCTION

DOR CODE	0100	SINGLE FAMILY	
MAP NUM		MKT AREA	03
NEIGHBORHOOD/LOC	3027.00		

AREA TYPE	TOTAL GROSS AREA	PCT OF BASE	TOT ADJ AREA	SUBAREA MARKET VALUE
TOTALS				

MARKET ADJUSTMENTS

TYPE	MDL	EFF. AREA	TOT ADJ PTS	EFF. BASE RATE	REPL. COST NEW	AYB	EYB	ECON	FNCT		NORM	% COND

BLD DATE		LGL DATE	
XF DATE		LAND DATE	
INC DATE		AG DATE	

VALUATION SUMMARY

VALUATION BY		STANDARD
Tax Group: 8	Tax Dist:	
BUILDING MARKET VALUE		311,257
TOTAL MARKET OB/XF VALUE		89,869
TOTAL LAND VALUE - MARKET		750,000
TOTAL MARKET VALUE		1,151,126
SOH/AGL Deduction		295,793
ASSESSED VALUE		855,333
TOTAL EXEMPTION VALUE	HX HB	50,000
BASE TAXABLE VALUE		805,333
TOTAL JUST VALUE		1,151,126
NCON VALUE		0
INCOME VALUE		
PREVIOUS YEAR MKT VALUE		1,138,687

PERMIT NUM	DESCRIPTION	AMT	ISSUED

SALES DATA

OFF RECORD Number	DATE	TYPE INST	Q / U	V / I	RSN CD	SALE PRICE
2716/755	4/16/2024	WD	U	I	11	100
GRANTOR: LOHMAN THOMAS F & SHI						
GRANTEE: LOHMAN FAMILY TRUST						
1365/1502	11/08/2005	WD	U	I	01	100
GRANTOR: LOHMAN THOMAS & FLOYD						
GRANTEE: LOHMAN THOMAS F & S						

BUILDING NOTES

BUILDING DIMENSIONS

EXTRA FEATURES

LN	OB/XF CODE	DESCRIPTION	BLD	CAP	L	W	UNITS	UT	Adj R	ADJ UNIT PRICE	ORIG COND	YEAR ON	YEAR ACTUAL	Q	% COND	OB/XF MKT VALUE	NOTES
11	0920	CWALL-WD/M	0	100	0	0	80.00	LF	390.00	390.00	100	1995	1995	3	20	6,240	
12	0855	CONC PAVER	0	100	0	0	3,153.00	SF	10.00	10.00	100	2010	2010	3	91	28,692	
13	0855	CONC PAVER	0	100	0	0	1,177.00	SF	10.00	10.00	100	2010	2010	3	91	10,711	
14	0462	ST/AL FNC	0	100	0	0	608.00	SF	10.00	10.00	100	2000	2000	3	28	1,702	
15	1242	WD DECK A	0	100	0	0	346.00	SF	10.00	10.00	100	1995	1995	3	20	692	
16	0861	POOL GUNIT	0	100	0	0	213.00	SF	85.00	85.00	100	2014	2014	3	75	13,579	
17	0855	CONC PAVER	0	100	0	0	904.00	SF	10.00	10.00	100	2014	2014	3	95	8,588	

LAND DESCRIPTION

TOTAL OB/XF 70,204

LN	USE CODE	CLS	LAND USE DESCRIPTION	CAP	RD	LOC ZONE	FRONT	DEPTH	TOT LND UTS	UNIT TYPE	DT	DPTH FACT	% COND	TOT ADJ	UNIT PRICE	ADJ UNIT PRICE	LAND VALUE	OTHER ADJUSTMENTS AND NOTES	YEAR	DENSITY	DECL	FRZ	YR	CONSRV

REVIEW DATE 01/31/2024 BY KBA Total Acres: 0.00 Total Land Value: 750,000 Market: 0 Agricultural: 0 Common: 750,000 PRINTED 08/06/2024 BY SYS