PT OF LOT 4
IN OR 2550/478
ESMT IN PT OR 621/391

VILLA ROBERT J & FABIOLA DEL CARMENT
4945 KEYSTONE LN
FERNANDINA BEACH, FL 32034

2024

00-00-30-0760-0004-0090

BUILDING CHARACTERISTICS

ELEMENT	CD	CONSTRUCTION
Exterior Wall	12	CEDAR 100
Roof Structur	03	GABLE/HIP 100
Roof Cover	03	COMP SHNGL 100
Interior Wall	05	DRYWALL 100
Interior Floo	12	HARDWOOD 60
Interior Floo	14	CARPET 40
Air Condition	03	CENTRAL 100
Heating Type	04	AIR DUCTED 100
Bedrooms		3 100
Bathrooms		2.5 100
Frame	02	WOOD FRAME 100
Stories	2.	2. 100
Units		0 100
BUD8 Adjustme	05	DIST 1A 100
Quality	03	Quality Level 03

DOR CODE 0100 SINGLE FAMILY
MAP NUM | MKT AREA 03
NEIGHBORHOOD/LOC 3027.00

AREA TYPE	TOTAL GROSS AREA	PCT OF BASE	TOT ADJ AREA	SUBAREA MARKET VALUE
BAL	60	15	9	911
BAS	1,200	100	1,200	121,473
BAS	77	100	77	7,795
BAS	170	100	170	17,209
FDG	784	60	470	47,577
FGR	483	55	266	26,926
FOP	231	30	69	6,984
FST	50	55	28	2,835
FUS	1,152	100	1,152	116,614
FUS	187	100	187	18,930
TOTALS	4,435		3,632	367,658

MARKET ADJUSTMENTS

TYPE	MDL	EFF. AREA	TOT ADJ PTS	EFF. BASE RATE	REPL. COST NEW	AYB	EYB	ECON	FNCT		NORM	% COND
0100	11	3,632	129.1590	122.70	445,646	1988	1988	0	0	0	17.50	82.50

1 SINGLE FAM – 100% - 2008 Heated Area: 2786 HX Base Yr 2008

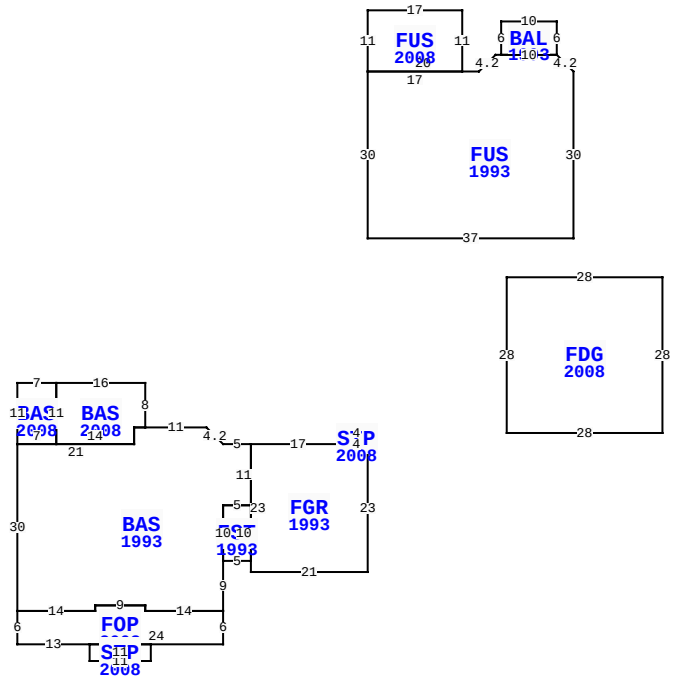

** This building has 12 Sub-Areas

4945 KEYSTONE LN, FERNANDINA BEACH

BLD DATE		LGL DATE	
XF DATE		LAND DATE	03/26/2024 MLU
INC DATE		AG DATE	

NASSAU COUNTY PROPERTY

PAGE 1 of 2 8

VALUATION SUMMARY

VALUATION BY		STANDARD
Tax Group: 8	Tax Dist:	
BUILDING MARKET VALUE		367,658
TOTAL MARKET OB/XF VALUE		24,133
TOTAL LAND VALUE - MARKET		300,000
TOTAL MARKET VALUE		691,791
SOH/AGL Deduction		352,144
ASSESSED VALUE		339,647
TOTAL EXEMPTION VALUE	HX HB	50,000
BASE TAXABLE VALUE		289,647
TOTAL JUST VALUE		691,791
NCON VALUE		0
INCOME VALUE		
PREVIOUS YEAR MKT VALUE		625,818

PERMIT NUM	DESCRIPTION	AMT	ISSUED
E21392	NEW CONSTR	1,500	11/01/2008
R11550	REPAIR/RRF	0	09/01/2008
B21473	ADDITION	50,000	05/01/2008
R11294	REPAIR/RRF	6,000	05/01/2008
6856	SWIM POOL	12,900	03/28/1991
4562	NEW CONSTR	0	09/30/1987

SALES DATA

OFF RECORD Number	DATE	TYPE INST	Q U	V I	RSN CD	SALE PRICE
2550/0478	2/22/2022	QC	U	I	11	100
GRANTOR: VILLA ROBERT J						
GRANTEE: VILLA ROBERT J & FA						
1529/0556	10/08/2007	TD	Q	I		470,000
GRANTOR: KUMMER JOHN A & JULIE						
GRANTEE: VILLA ROBERT J						

BUILDING NOTES

BUILDING DIMENSIONS

STP=[YR=2008] W4 S2 FGR=[YR=1993] W17 BAS=[YR=1993] W5 U3 L3 W11 BAS=[YR=2008] N8 W16 BAS=[YR=2008] W7 S11 E7 N11$ S11 E14 N3 E2$ W2 S3 W21 S30 FOP=[YR=2008] S6 E13 STP=[YR=2008] S3 E11 N3 W11$ E24 N6 W14 N1 W9 S1 W14$ E14 N1 E9 S1 E14 N9 FST=[YR=1993] E5 N10 W5 S10$ N10 E5 N11$ S23 E21 N23 W4$ E4 N2$ PTR= E25 FDG=[YR=2008] N28 E28 S28 W28$ W25$ PTR=N35 FUS=[YR=1993] N30 FUS=[YR=2008] N11 E17 S11 W17$ E20 R3 U3 E1 BAL=[YR=1993] N6 E10 S6 W10$ E10 R3 D3 S30 W37$ S35$.

EXTRA FEATURES

LN	OB/XF CODE	DESCRIPTION	BLD	CAP	L	W	UNITS	UT	Adj R	ADJ UNIT PRICE	ORIG COND	YEAR ON	YEAR ACTUAL	Q	% COND	OB/XF MKT VALUE	NOTES
1	0504	FP-ELECTRI	0	100	0	0	1.00	UT	2,000.00	2,000.00	100	1988	1988	3	64	1,280	
2	1242	WD DECK A	0	100	0	0	524.00	SF	10.00	10.00	100	1988	1988	3	20	1,048	
3	0861	POOL GUNIT	0	100	31	16	496.00	SF	85.00	85.00	100	1991	1991	3	20	8,432	
4	0910	SCRN RM L	0	100	0	0	1,072.00	SF	15.00	15.00	100	1991	1991	3	20	3,216	
5	0845	KOOL DECK	0	100	0	0	611.00	SF	7.25	7.25	100	1991	1991	3	62	2,746	
6	0940	SHEDS/PORT	0	100	15	10	150.00	SF	30.00	30.00	100	2001	2001	3	20	900	
7	0811	CONCRETE B	0	100	0	0	292.00	SF	5.20	5.20	100	1988	1988	3	54.5	828	
8	0811	CONCRETE B	0	100	0	0	548.00	SF	5.20	5.20	100	1995	1995	3	70	1,995	
9	0810	CONCRETE A	0	100	0	0	104.00	SF	6.50	6.50	100	1988	1988	3	54.5	368	
10	0810	CONCRETE A	0	100	254	1	254.00	SF	6.50	6.50	100	2008	2008	3	89	1,469	

TOTAL OB/XF 22,282

LAND DESCRIPTION

LN	USE CODE	CLS	LAND USE DESCRIPTION	CAP	RD	LOC ZONE	FRONT	DEPTH	TOT LND UTS	UNIT TYPE	DT	DPTH FACT	% COND	TOT ADJ	UNIT PRICE	ADJ UNIT PRICE	LAND VALUE	OTHER ADJUSTMENTS AND NOTES	YEAR	DENSITY	DECL	FRZ	YR	CONSRV
1	000100	C	SFR	100		RSF-1	0.00	0.00	1.00	UT		1.00	1.00	1.00	300,000.00	300,000.00	300,000							

REVIEW DATE 01/31/2024 BY KBA Total Acres: 0.00 Total Land Value: 300,000 Market: 0 Agricultural: 0 Common: 300,000 PRINTED 08/06/2024 BY SYS

PT OF LOT 4
IN OR 2550/478
ESMT IN PT OR 621/391

VILLA ROBERT J & FABIOLA DEL CARMENT
4945 KEYSTONE LN
FERNANDINA BEACH, FL 32034

2024

00-00-30-0760-0004-0090

NASSAU COUNTY PROPERTY

BUILDING CHARACTERISTICS

ELEMENT	CD	CONSTRUCTION

DOR CODE	0100	SINGLE FAMILY	
MAP NUM		MKT AREA	03
NEIGHBORHOOD/LOC	3027.00		

AREA TYPE	TOTAL GROSS AREA	PCT OF BASE	TOT ADJ AREA	SUBAREA MARKET VALUE
TOTALS				

MARKET ADJUSTMENTS

TYPE	MDL	EFF. AREA	TOT ADJ PTS	EFF. BASE RATE	REPL. COST NEW	AYB	EYB	ECON	FNCT		NORM	% COND

BLD DATE		LGL DATE	
XF DATE		LAND DATE	03/26/2024 MLU
INC DATE		AG DATE	

VALUATION SUMMARY

VALUATION BY		STANDARD
Tax Group: 8	Tax Dist:	
BUILDING MARKET VALUE		367,658
TOTAL MARKET OB/XF VALUE		24,133
TOTAL LAND VALUE - MARKET		300,000
TOTAL MARKET VALUE		691,791
SOH/AGL Deduction		352,144
ASSESSED VALUE		339,647
TOTAL EXEMPTION VALUE	HX HB	50,000
BASE TAXABLE VALUE		289,647
TOTAL JUST VALUE		691,791
NCON VALUE		0
INCOME VALUE		
PREVIOUS YEAR MKT VALUE		625,818

PERMIT NUM	DESCRIPTION	AMT	ISSUED
BP4280	N/A	86,208	08/03/1987

SALES DATA

OFF RECORD Number	DATE	TYPE INST	Q / U	V / I	RSN CD	SALE PRICE
2550/0478	2/22/2022	QC	U	I	11	100
GRANTOR: VILLA ROBERT J						
GRANTEE: VILLA ROBERT J & FA						
1529/0556	10/08/2007	TD	Q	I		470,000
GRANTOR: KUMMER JOHN A & JULIE						
GRANTEE: VILLA ROBERT J						

BUILDING NOTES

BUILDING DIMENSIONS

EXTRA FEATURES

LN	OB/XF CODE	DESCRIPTION	BLD	CAP	L	W	UNITS	UT	Adj R	ADJ UNIT PRICE	ORIG COND	YEAR ON	YEAR ACTUAL	Q	% COND	OB/XF MKT VALUE	NOTES
11	0810	CONCRETE A	0	100	20	16	320.00	SF	6.50	6.50	100	2008	2008	3	89	1,851	

TOTAL OB/XF 1,851

LAND DESCRIPTION

LN	USE CODE	CLS	LAND USE DESCRIPTION	CAP	RD	LOC ZONE	FRONT	DEPTH	TOT LND UTS	UNIT TYPE	DT	DPTH FACT	% COND	TOT ADJ	UNIT PRICE	ADJ UNIT PRICE	LAND VALUE	OTHER ADJUSTMENTS AND NOTES	YEAR	DENSITY	DECL	FRZ	YR	CONSRV

REVIEW DATE 01/31/2024 BY KBA Total Acres: 0.00 Total Land Value: 300,000 Market: 0 Agricultural: 0 Common: 300,000 PRINTED 08/06/2024 BY SYS