PT OF LOT 4
IN OR 2269/1176
SUB PF SO PT SEC 12 DB 39/292

ALVARADO CARLOS
1340 MANUCY ROAD
FERNANDINA BEACH, FL 32034

2024

00-00-30-0760-0004-0070

NASSAU COUNTY PROPERTY

BUILDING CHARACTERISTICS

ELEMENT	CD	CONSTRUCTION
Exterior Wall	12	CEDAR 100
Roof Structur	03	GABLE/HIP 100
Roof Cover	03	COMP SHNGL 100
Interior Wall	05	DRYWALL 100
Interior Floo	11	CLAY TILE 70
Interior Floo	12	HARDWOOD 30
Air Condition	03	CENTRAL 100
Heating Type	04	AIR DUCTED 100
Bedrooms		4 100
Bathrooms		4 100
Frame	02	WOOD FRAME 100
Stories	2.	2. 100
Units		0 100
BUD8 Adjustme	05	DIST 1A 100
Occupancy	00	NONE 100
Quality	04	Quality Level 04

DOR CODE	0100	SINGLE FAMILY	
MAP NUM		MKT AREA	03
NEIGHBORHOOD/LOC	3027.00		

AREA TYPE	TOTAL GROSS AREA	PCT OF BASE	TOT ADJ AREA	SUBAREA MARKET VALUE
BAS	1,919	100	1,919	190,567
BAS	170	100	170	16,882
BAS	170	100	170	16,882
DCK	662	10	66	6,554
FOP	108	30	32	3,178
FUS	512	100	512	50,844
STR	72	10	7	695
TOTALS	3,613		2,876	285,603

MARKET ADJUSTMENTS

TYPE	MDL	EFF. AREA	TOT ADJ PTS	EFF. BASE RATE	REPL. COST NEW	AYB	EYB	ECON	FNCT		NORM	% COND
0100	01	2,876	122.9802	116.83	336,003	1986	1993	0	0	0	15.00	85.00

1 SINGLE FAM – 100% - 2007 Heated Area: 2771 HX Base Yr 2007

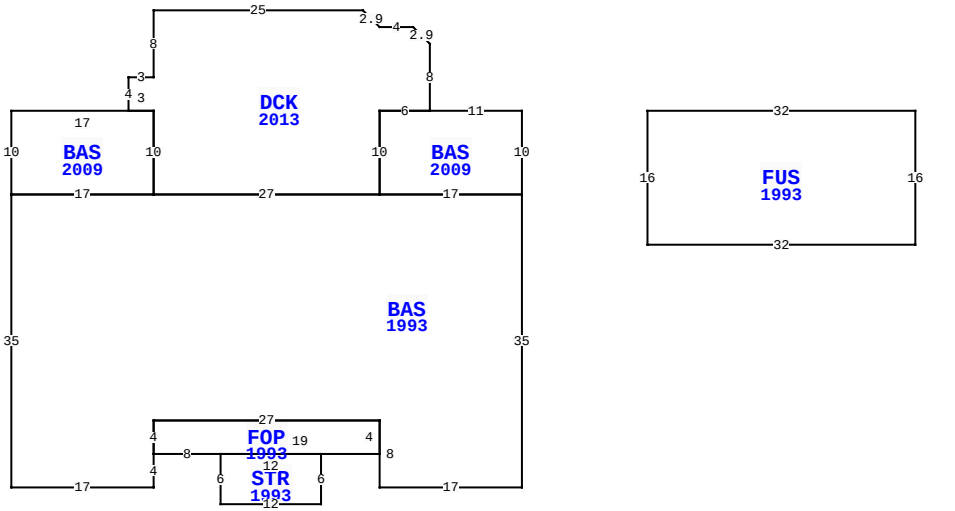

1340 MANUCY RD, FERNANDINA BEACH

BLD DATE		LGL DATE	
XF DATE		LAND DATE	03/26/2024 MLU
INC DATE		AG DATE	

VALUATION SUMMARY

VALUATION BY		STANDARD
Tax Group: 8	Tax Dist:	
BUILDING MARKET VALUE		285,603
TOTAL MARKET OB/XF VALUE		12,892
TOTAL LAND VALUE - MARKET		300,000
TOTAL MARKET VALUE		598,495
SOH/AGL Deduction		328,247
ASSESSED VALUE		270,248
TOTAL EXEMPTION VALUE	HX HB	50,000
BASE TAXABLE VALUE		220,248
TOTAL JUST VALUE		598,495
NCON VALUE		0
INCOME VALUE		
PREVIOUS YEAR MKT VALUE		535,998

PERMIT NUM	DESCRIPTION	AMT	ISSUED
B25218	REMODEL	1,200	10/01/2011
M14560	MECH OTHER	0	05/01/2009
B22467	REMODEL	15,900	05/01/2009
M14560	MECH OTHER	0	05/01/2009
B22439	DEMOLITION	600	04/01/2009

SALES DATA

OFF RECORD Number	DATE	TYPE INST	Q / U	V / I	RSN CD	SALE PRICE
2269/1176	4/12/2019	WD	U	I	11	100
GRANTOR: ALVARADO JENNIFER F &						
GRANTEE: ALVARADO CARLOS						
1416/0578	6/01/2006	WD	Q	I		435,000
GRANTOR: LANE WILLIAM C & BARB						
GRANTEE: ALVARADO JENNIFER F						

BUILDING NOTES

BUILDING DIMENSIONS

BAS=[YR=2009] W11 DCK=[YR=2013] N8 U2 L2 W4 U2 L2 W25 S8 W3 S4 E3 S10 E27 N10 E6$ W6 S10 BAS=[YR=1993] W27 BAS=[YR=2009] N10 W17 S10 E17$ W17 S35 E17 N4 FOP=[YR=1993] E8 STR=[YR=1993] S6 E12 N6 W12$ E19 N4 W27 S4$ N4 E27 S8 E17 N35 W17$ E17 N10 $ PTR= E15 FUS=[YR=1993] E32 S16W32 N16 $ W15 $.

EXTRA FEATURES

LN	OB/XF CODE	DESCRIPTION	BLD	CAP	L	W	UNITS	UT	Adj R	ADJ UNIT PRICE	ORIG COND	YEAR ON	YEAR ACTUAL	Q	% COND	OB/XF MKT VALUE	NOTES
1	0500	FP-PRE FAB	0	100	0	0	1.00	UT	3,500.00	3,500.00	100	1986	1986	3	60	2,100	
2	0940	SHEDS/PORT	0	100	16	10	160.00	SF	30.00	30.00	100	1987	1987	3	20	960	
3	0855	CONC PAVER	0	100	0	0	98.00	SF	10.00	10.00	100	2005	2005	3	86	843	
4	0812	CONCRETE C	0	100	0	0	2,613.00	SF	4.00	4.00	100	2005	2005	3	86	8,989	

LAND DESCRIPTION

TOTAL OB/XF 12,892

LN	USE CODE	CLS	LAND USE DESCRIPTION	CAP	RD	LOC ZONE	FRONT	DEPTH	TOT LND UTS	UNIT TYPE	DT	DPTH FACT	% COND	TOT ADJ	UNIT PRICE	ADJ UNIT PRICE	LAND VALUE	OTHER ADJUSTMENTS AND NOTES	YEAR	DENSITY	DECL	FRZ	YR	CONSRV
1	000100	C	SFR	100		RSF-1	0.00	0.00	1.00	UT		1.00	1.00	1.00	300,000.00	300,000.00	300,000							

REVIEW DATE 01/31/2024 BY KBA Total Acres: 0.00 Total Land Value: 300,000 Market: 0 Agricultural: 0 Common: 300,000 PRINTED 08/06/2024 BY SYS