PT LOTS 3,6 & CLOSED RD LYING
BETWEEN LOTS 3 & 6
IN OR 2525/1200 BEING

PALMETTO WALK AMELIA LLC
960185 GATEWAY BLVD STE 203
FERNANDINA BEACH, FL 32034

**2024**

**00-00-30-0760-0003-0030**

## BUILDING CHARACTERISTICS

| ELEMENT | CD | CONSTRUCTION |
|---|---|---|
| Exterior Wall | 06 | BD/BATTEN 100 |
| Roof Structur | 04 | WOOD TRUSS 100 |
| Roof Cover | 12 | MODULAR MT 100 |
| Interior Wall | 05 | DRYWALL 100 |
| Interior Floo | 14 | CARPET 70 |
| Interior Floo | 13 | LVT/LAMNT 30 |
| Ceiling | 02 | F.NOT SUS 100 |
| Air Condition | 03 | CENTRAL 100 |
| Heating Type | 04 | AIR DUCTED 100 |
| Fixtures | | 11 100 |
| Frame | 02 | WOOD FRAME 100 |
| Story Height | | 9 100 |
| RMS | | 4 100 |
| Stories | 2. | 2. 100 |
| Units | | 0 100 |
| Occupancy | 00 | NONE 100 |
| Quality | 03 | Quality Level 03 |
| DOR CODE | 1600 | COMMUNITY SHOPPING |
| MAP NUM | | MKT AREA 03 |
| NEIGHBORHOOD/LOC | 3016.00 | |

| AREA TYPE | TOTAL GROSS AREA | PCT OF BASE | TOT ADJ AREA | SUBAREA MARKET VALUE |
|---|---|---|---|---|
| BAS | 989 | 100 | 989 | 68,146 |
| BAS | 322 | 100 | 322 | 22,187 |
| BAS | 230 | 100 | 230 | 15,848 |
| CAN | 208 | 30 | 62 | 4,272 |
| CAN | 80 | 30 | 24 | 1,654 |
| CAN | 116 | 30 | 35 | 2,412 |
| DCK | 90 | 10 | 9 | 620 |
| DCK | 222 | 10 | 22 | 1,516 |
| DCK | 32 | 10 | 3 | 207 |
| FUS | 989 | 100 | 989 | 68,146 |
| TOTALS | 3,338 | | 2,691 | 185,421 |

## MARKET ADJUSTMENTS

| TYPE | MDL | EFF. AREA | TOT ADJ PTS | EFF. BASE RATE | REPL. COST NEW | AYB | EYB | ECON | FNCT | AP | NORM | % COND |
|---|---|---|---|---|---|---|---|---|---|---|---|---|
| 2101 | 04 | 2,691 | 90.9168 | 156.60 | 421,411 | 1979 | 1992 | 0 | 0 | 20 | 36.00 | 44.00 |

4 RSTARANT 1 - 0% - 0 Heated Area: 2530 HX Base Yr

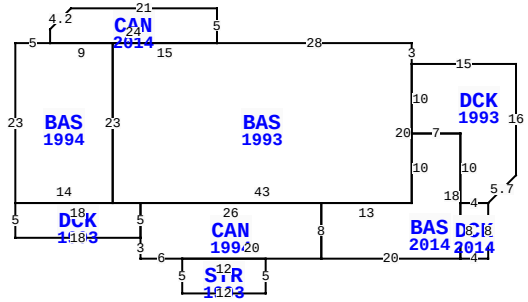


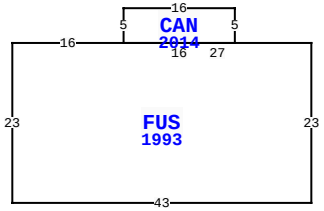


** This building has 11 Sub-Areas

4828 FIRST COAST HWY, FERNANDINA BEACH

| | | | |
|---|---|---|---|
| BLD DATE | 06/11/2018 KK | LGL DATE | |
| XF DATE | | LAND DATE | |
| INC DATE | | AG DATE | |

## EXTRA FEATURES

| LN | OB/XF CODE | DESCRIPTION | BLD | CAP | L | W | UNITS | UT | Adj R | ADJ UNIT PRICE | ORIG COND | YEAR ON | YEAR ACTUAL | Q | % COND | OB/XF MKT VALUE | NOTES |
|---|---|---|---|---|---|---|---|---|---|---|---|---|---|---|---|---|---|
| 1 | 1242 | WD DECK A | 0 | 0 | 5 | 16 | 90.00 | SF | 10.00 | 10.00 | 100 | 1986 | 1986 | 3 | 20 | 180 | |
| 2 | 0810 | CONCRETE A | 0 | 0 | 6 | 20 | 120.00 | SF | 6.50 | 6.50 | 100 | 1986 | 1986 | 3 | 49.5 | 386 | |
| 3 | 0803 | ASPHALT C | 0 | 0 | 0 | 0 | 21,651.00 | SF | 2.00 | 2.00 | 100 | 1986 | 1986 | 3 | 50 | 21,651 | |
| 4 | 1242 | WD DECK A | 0 | 0 | 38 | 4 | 152.00 | SF | 10.00 | 10.00 | 100 | 1986 | 1986 | 3 | 20 | 304 | |
| 5 | 0810 | CONCRETE A | 0 | 0 | 21 | 21 | 441.00 | SF | 6.50 | 6.50 | 100 | 1986 | 1986 | 3 | 49.5 | 1,419 | |
| 6 | 1242 | WD DECK A | 0 | 0 | 8 | 24 | 192.00 | SF | 10.00 | 10.00 | 100 | 1986 | 1986 | 3 | 20 | 384 | |
| 7 | 0810 | CONCRETE A | 0 | 0 | 0 | 0 | 363.00 | SF | 6.50 | 6.50 | 100 | 1987 | 1987 | 3 | 52 | 1,227 | |
| 8 | 0446 | BOX FNC 6' | 0 | 0 | 0 | 0 | 16.00 | LF | 20.00 | 20.00 | 100 | 1987 | 1987 | 3 | 20 | 64 | |
| 9 | 0940 | SHEDS/PORT | 0 | 0 | 8 | 8 | 64.00 | SF | 30.00 | 30.00 | 100 | 1987 | 1987 | 3 | 20 | 384 | |
| 10 | 1242 | WD DECK A | 0 | 0 | 12 | 10 | 120.00 | SF | 10.00 | 10.00 | 100 | 1987 | 1987 | 3 | 20 | 240 | |

TOTAL OB/XF 26,239

## NASSAU COUNTY PROPERTY



### VALUATION SUMMARY

| | |
|---|---|
| VALUATION BY | STANDARD |
| Tax Group: 8 | Tax Dist: |
| BUILDING MARKET VALUE | 516,565 |
| TOTAL MARKET OB/XF VALUE | 59,444 |
| TOTAL LAND VALUE - MARKET | 1,842,580 |
| TOTAL MARKET VALUE | 2,418,589 |
| SOH/AGL Deduction | 0 |
| ASSESSED VALUE | 2,418,589 |
| TOTAL EXEMPTION VALUE | 0 |
| BASE TAXABLE VALUE | 2,418,589 |
| TOTAL JUST VALUE | 2,418,589 |
| NCON VALUE | 0 |
| INCOME VALUE | 21,233,736 |
| PREVIOUS YEAR MKT VALUE | 2,470,031 |

| PERMIT NUM | DESCRIPTION | AMT | ISSUED |
|---|---|---|---|
| 230012973 | 2700 SF STORAGE B | 179,496 | 10/09/2023 |
| 230012548 | COVERD PORCH | 65,000 | 09/28/2023 |
| E1427333 | REMODEL | 0 | 03/01/2014 |
| R1413839 | REPAIR/RRF | 0 | 03/01/2014 |
| B1428318 | FOUNDATION | 10,414 | 02/01/2014 |
| B1428339 | REMODEL | 41,655 | 02/01/2014 |

## SALES DATA

| OFF RECORD Number | DATE | TYPE INST | Q / U | V / I | RSN CD | SALE PRICE |
|---|---|---|---|---|---|---|
| 2525/1200 | 12/29/2021 | WD | Q | I | 01 | 2,250,000 |
| GRANTOR: PALMETTO WALK 1 INC | | | | | | |
| GRANTEE: PALMETTO WALK AMELI | | | | | | |
| 2346/1688 | 3/13/2020 | WD | U | I | 11 | 100 |
| GRANTOR: TENNILLE WILSON R | | | | | | |
| GRANTEE: PALMETTO WALK 1 INC | | | | | | |

## BUILDING NOTES

## BUILDING DIMENSIONS

DCK=[YR=1993] W15 BAS=[YR=1993] N3 W28 CAN=[YR=2014] N5 W21 D3 L3 S2 BAS=[YR=1994] W5 S23 DCK=[YR=1993] S5 E18 CAN=[YR=1994] S3 E6 STR=[YR=1993] S5 E12 N5 W12$ E20 BAS=[YR=2014] E20 DCK=[YR=2014] E4 N8 W4 S8$ N18 W7 S10 W13 S8$ N8 W26 S5$ N5 W18$ E14 N23 W9$ E24$ W15 S23 E43 N20$ S10 E7 S10 E4 U4 R4 N16 $ PTR= E15 FUS=[YR=1993] E16 CAN=[YR=2014] N5 E16 S5 W16$ E27 S23 W43 N23$ W15$.

## LAND DESCRIPTION

| LN | USE CODE | CLS | LAND USE DESCRIPTION | CAP | RD | LOC ZONE | FRONT | DEPTH | TOT LND UTS | UNIT TYPE | DT | DPTH FACT | % COND | TOT ADJ | UNIT PRICE | ADJ UNIT PRICE | LAND VALUE | OTHER ADJUSTMENTS AND NOTES | YEAR | DENSITY | DECL | FRZ | YR | CONSRV |
|---|---|---|---|---|---|---|---|---|---|---|---|---|---|---|---|---|---|---|---|---|---|---|---|---|
| 1 | 001600 | C | SH CTR COM | 0 | | CG | 0.00 | 0.00 | 184,258.00 | SF | | 1.00 | 1.00 | 0.80 | 12.50 | 10.00 | 1,842,580 | | | | | | | |

REVIEW DATE 07/12/2024 BY KBA Total Acres: 0.00 Total Land Value: 1,842,580 Market: 0 Agricultural: 0 Common: 1,842,580 PRINTED 08/06/2024 BY SYS

PT LOTS 3,6 & CLOSED RD LYING
BETWEEN LOTS 3 & 6
IN OR 2525/1200 BEING

PALMETTO WALK AMELIA LLC
960185 GATEWAY BLVD STE 203
FERNANDINA BEACH, FL 32034

**2024**

**00-00-30-0760-0003-0030**

## NASSAU COUNTY PROPERTY



## BUILDING CHARACTERISTICS

| ELEMENT | CD | CONSTRUCTION |
|---|---|---|
| Exterior Wall | 06 | BD/BATTEN 100 |
| Roof Structur | 04 | WOOD TRUSS 100 |
| Roof Cover | 12 | MODULAR MT 100 |
| Interior Wall | 05 | DRYWALL 100 |
| Interior Floo | 11 | CLAY TILE 60 |
| Interior Floo | 12 | HARDWOOD 40 |
| Ceiling | 02 | F.NOT SUS 100 |
| Air Condition | 04 | ROOF TOP 100 |
| Heating Type | 04 | AIR DUCTED 100 |
| Fixtures | | 2 100 |
| Frame | 02 | WOOD FRAME 100 |
| Story Height | | 9 100 |
| RMS | | 3 100 |
| Stories | 2. | 2. 100 |
| Units | | 0 100 |
| Occupancy | 00 | NONE 100 |
| Quality | 03 | Quality Level 03 |
| DOR CODE | 1600 | COMMUNITY SHOPPING |
| MAP NUM | | MKT AREA 03 |
| NEIGHBORHOOD/LOC | 3016.00 | |

| AREA TYPE | TOTAL GROSS AREA | PCT OF BASE | TOT ADJ AREA | SUBAREA MARKET VALUE |
|---|---|---|---|---|
| BAL | 25 | 15 | 4 | 151 |
| BAS | 2,135 | 100 | 2,135 | 80,434 |
| DCK | 50 | 10 | 5 | 188 |
| FUS | 1,269 | 100 | 1,269 | 47,808 |
| STR | 56 | 10 | 6 | 226 |
| UOP | 30 | 20 | 6 | 226 |
| UOP | 74 | 20 | 15 | 565 |
| USP | 384 | 40 | 154 | 5,802 |
| TOTALS | 4,023 | | 3,594 | 135,400 |

## MARKET ADJUSTMENTS

| TYPE | MDL | EFF. AREA | TOT ADJ PTS | EFF. BASE RATE | REPL. COST NEW | AYB | EYB | ECON | FNCT | AP | NORM | % COND |
|---|---|---|---|---|---|---|---|---|---|---|---|---|
| 1101 | 04 | 3,594 | 88.1268 | 125.58 | 451,335 | 1986 | 1986 | 0 | 0 | 20 | 50.00 | 30.00 |

5 RETAILSTOR – 0% - 0 Heated Area: 3404 HX Base Yr

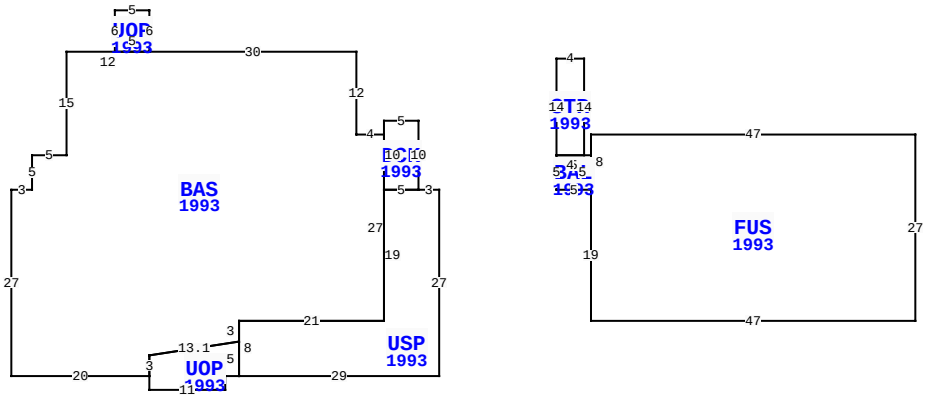


4828 FIRST COAST HWY, FERNANDINA BEACH

| | | | |
|---|---|---|---|
| BLD DATE | 06/11/2018 KK | LGL DATE | |
| XF DATE | | LAND DATE | |
| INC DATE | | AG DATE | |

## NASSAU COUNTY PROPERTY — VALUATION SUMMARY

| | |
|---|---|
| VALUATION BY | STANDARD |
| Tax Group: 8 | Tax Dist: |
| BUILDING MARKET VALUE | 516,565 |
| TOTAL MARKET OB/XF VALUE | 59,444 |
| TOTAL LAND VALUE - MARKET | 1,842,580 |
| TOTAL MARKET VALUE | 2,418,589 |
| SOH/AGL Deduction | 0 |
| ASSESSED VALUE | 2,418,589 |
| TOTAL EXEMPTION VALUE | 0 |
| BASE TAXABLE VALUE | 2,418,589 |
| TOTAL JUST VALUE | 2,418,589 |
| NCON VALUE | 0 |
| INCOME VALUE | 21,233,736 |
| PREVIOUS YEAR MKT VALUE | 2,470,031 |

| PERMIT NUM | DESCRIPTION | AMT | ISSUED |
|---|---|---|---|
| M1419233 | H/AC | 0 | 02/01/2014 |
| E1427159 | REMODEL | 0 | 01/01/2014 |
| P1417131 | REMODEL | 0 | 01/01/2014 |
| E25684 | NEW CONSTR | 0 | 12/01/2012 |
| M1217793 | NEW CONSTR | 0 | 12/01/2012 |
| M1217794 | H/AC | 0 | 12/01/2012 |

## SALES DATA

| OFF RECORD Number | DATE | TYPE INST | Q / U | V / I | RSN CD | SALE PRICE |
|---|---|---|---|---|---|---|
| 2525/1200 | 12/29/2021 | WD | Q | I | 01 | 2,250,000 |
| GRANTOR: PALMETTO WALK 1 INC | | | | | | |
| GRANTEE: PALMETTO WALK AMELI | | | | | | |
| 2346/1688 | 3/13/2020 | WD | U | I | 11 | 100 |
| GRANTOR: TENNILLE WILSON R | | | | | | |
| GRANTEE: PALMETTO WALK 1 INC | | | | | | |

## BUILDING NOTES

## BUILDING DIMENSIONS

BAS=[YR=1993] W4 N12 W30 UOP=[YR=1993] N6 W5 S6 E5$ W12 S15 W5 S5 W3 S27 E20 UOP=[YR=1993] S2 E11 N2 E2 USP=[YR=1993] E29 N27 W3 DCK=[YR=1993] N10 W5 S10 E5$ W5 S19 W21 S8$ N5 L13 D2 S3$ N3 R13 U2 N3 E21 N27$ PTR=E30 FUS=[YR=1993] E47 S27 W47 N19 BAL=[YR=1993] W5 N5 STR=[YR=1993] N14 E4 S14 W4$ E5 S5$ N8$ W30$.

## EXTRA FEATURES

| LN | OB/XF CODE | DESCRIPTION | BLD | CAP | L | W | UNITS | UT | Adj R | ADJ UNIT PRICE | ORIG COND | YEAR ON | YEAR ACTUAL | Q | % COND | OB/XF MKT VALUE | NOTES |
|---|---|---|---|---|---|---|---|---|---|---|---|---|---|---|---|---|---|
| 11 | 0855 | CONC PAVER | 0 | 0 | 0 | 0 | 141.00 | SF | 10.00 | 10.00 | 100 | 1987 | 1987 | 3 | 52 | 733 | |
| 12 | 0855 | CONC PAVER | 0 | 0 | 18 | 4 | 72.00 | SF | 10.00 | 10.00 | 100 | 1987 | 1987 | 3 | 52 | 374 | |
| 13 | 0430 | CL FNC 6B | 0 | 0 | 0 | 0 | 56.00 | LF | 9.70 | 9.70 | 100 | 1987 | 1987 | 3 | 24 | 130 | |
| 14 | 0465 | FNC GT 15' | 0 | 0 | 0 | 0 | 1.00 | UT | 562.50 | 562.50 | 100 | 2000 | 2000 | 3 | 52 | 293 | |
| 15 | 0424 | CL FNC 6' | 0 | 0 | 0 | 0 | 184.00 | LF | 20.00 | 20.00 | 100 | 2005 | 2005 | 3 | 66 | 2,429 | |
| 16 | 0971 | ST LGHT OV | 0 | 0 | 0 | 0 | 2.00 | UT | 1,555.00 | 1,555.00 | 100 | 2005 | 2005 | 3 | 66 | 2,053 | |
| 17 | 0811 | CONCRETE B | 0 | 0 | 0 | 0 | 541.00 | SF | 5.20 | 5.20 | 100 | 2012 | 2012 | 3 | 93 | 2,616 | |
| 18 | 0855 | CONC PAVER | 0 | 0 | 0 | 0 | 177.00 | SF | 10.00 | 10.00 | 100 | 1987 | 1987 | 3 | 52 | 920 | |
| 19 | 0479 | VF PICKET | 0 | 0 | 0 | 0 | 24.00 | LF | 10.00 | 10.00 | 100 | 2000 | 2000 | 3 | 52 | 125 | |
| 20 | 0810 | CONCRETE A | 0 | 0 | 16 | 7 | 112.00 | SF | 6.50 | 6.50 | 100 | 1987 | 1987 | 3 | 52 | 379 | |

TOTAL OB/XF 10,052

## LAND DESCRIPTION

| LN | USE CODE | CLS | LAND USE DESCRIPTION | CAP | RD | LOC ZONE | FRONT | DEPTH | TOT LND UTS | UNIT TYPE | DT | DPTH FACT | % COND | TOT ADJ | UNIT PRICE | ADJ UNIT PRICE | LAND VALUE | OTHER ADJUSTMENTS AND NOTES | YEAR | DENSITY | DECL | FRZ | YR | CONSRV |
|---|---|---|---|---|---|---|---|---|---|---|---|---|---|---|---|---|---|---|---|---|---|---|---|---|

REVIEW DATE 07/12/2024 BY KBA Total Acres: 0.00 Total Land Value: 1,842,580 Market: 0 Agricultural: 0 Common: 1,842,580 PRINTED 08/06/2024 BY SYS

PT LOTS 3,6 & CLOSED RD LYING
BETWEEN LOTS 3 & 6
IN OR 2525/1200 BEING

PALMETTO WALK AMELIA LLC
960185 GATEWAY BLVD STE 203
FERNANDINA BEACH, FL 32034

**2024**

**00-00-30-0760-0003-0030**

## BUILDING CHARACTERISTICS

| ELEMENT | CD | CONSTRUCTION |
|---|---|---|
| Exterior Wall | 06 | BD/BATTEN 100 |
| Roof Structur | 04 | WOOD TRUSS 100 |
| Roof Cover | 12 | MODULAR MT 100 |
| Interior Wall | 05 | DRYWALL 100 |
| Interior Floo | 13 | LVT/LAMNT 100 |
| Ceiling | 02 | F.NOT SUS 100 |
| Air Condition | 03 | CENTRAL 100 |
| Heating Type | 04 | AIR DUCTED 100 |
| Fixtures | | 2 100 |
| Frame | 02 | WOOD FRAME 100 |
| Story Height | | 9 100 |
| RMS | | 4 100 |
| Stories | 2. | 2. 100 |
| Units | | 0 100 |
| Occupancy | 00 | NONE 100 |
| Quality | 03 | Quality Level 03 |
| DOR CODE | 1600 | COMMUNITY SHOPPING |
| MAP NUM | | MKT AREA 03 |
| NEIGHBORHOOD/LOC | 3016.00 | |

| AREA TYPE | TOTAL GROSS AREA | PCT OF BASE | TOT ADJ AREA | SUBAREA MARKET VALUE |
|---|---|---|---|---|
| BAS | 858 | 100 | 858 | 30,155 |
| FOP | 256 | 30 | 77 | 2,706 |
| FUS | 858 | 100 | 858 | 30,155 |
| SFB | 264 | 80 | 211 | 7,416 |
| SFB | 676 | 80 | 541 | 19,013 |
| STR | 32 | 10 | 3 | 105 |
| STR | 48 | 10 | 5 | 176 |
| STR | 64 | 10 | 6 | 211 |
| UOP | 24 | 20 | 5 | 176 |
| UOP | 24 | 20 | 5 | 176 |
| TOTALS | 3,173 | | 2,583 | 90,779 |

## MARKET ADJUSTMENTS

| TYPE | MDL | EFF. AREA | TOT ADJ PTS | EFF. BASE RATE | REPL. COST NEW | AYB | EYB | ECON | FNCT | AP | NORM | % COND |
|---|---|---|---|---|---|---|---|---|---|---|---|---|
| 1101 | 04 | 2,583 | 82.2120 | 117.15 | 302,598 | 1984 | 1984 | 0 | 0 | 20 | 50.00 | 30.00 |

6 RETAILSTOR – 0% - 0 Heated Area: 2468 HX Base Yr

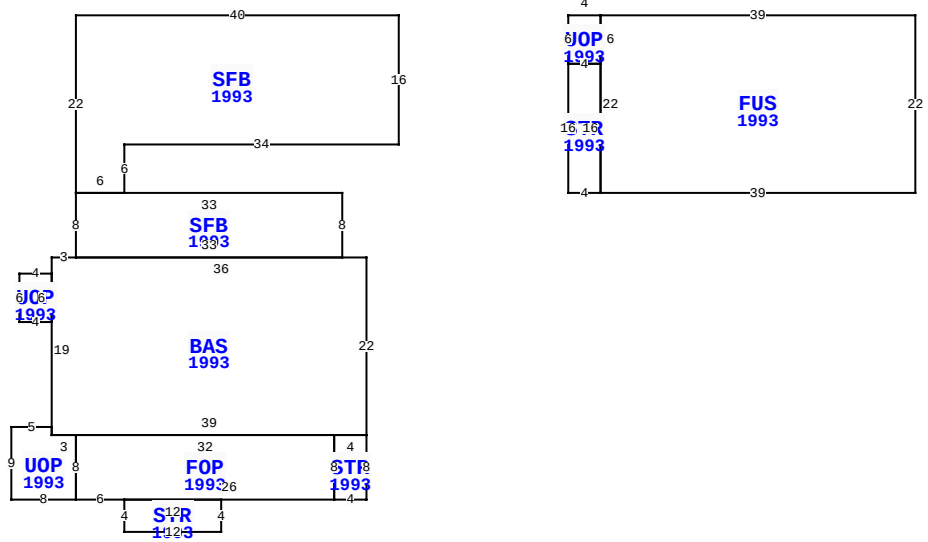


** This building has 11 Sub-Areas

4828 FIRST COAST HWY, FERNANDINA BEACH

| | | | |
|---|---|---|---|
| BLD DATE | 06/11/2018 KK | LGL DATE | |
| XF DATE | | LAND DATE | |
| INC DATE | | AG DATE | |

## NASSAU COUNTY PROPERTY

PAGE 3 of 5 8

### VALUATION SUMMARY

| | |
|---|---|
| VALUATION BY | STANDARD |
| Tax Group: 8 | Tax Dist: |
| BUILDING MARKET VALUE | 516,565 |
| TOTAL MARKET OB/XF VALUE | 59,444 |
| TOTAL LAND VALUE - MARKET | 1,842,580 |
| TOTAL MARKET VALUE | 2,418,589 |
| SOH/AGL Deduction | 0 |
| ASSESSED VALUE | 2,418,589 |
| TOTAL EXEMPTION VALUE | 0 |
| BASE TAXABLE VALUE | 2,418,589 |
| TOTAL JUST VALUE | 2,418,589 |
| NCON VALUE | 0 |
| INCOME VALUE | 21,233,736 |
| PREVIOUS YEAR MKT VALUE | 2,470,031 |

| PERMIT NUM | DESCRIPTION | AMT | ISSUED |
|---|---|---|---|
| C24738 | CO ISSUED | 0 | 07/01/2011 |
| B9602874 | REMODEL | 6,200 | 04/01/1996 |
| B960425 | REPAIR/RRF | 1,000 | 01/01/1996 |
| E952206 | REMODEL | 2,650 | 10/01/1995 |
| 7787 | REMODEL | 5,000 | 01/21/1992 |
| 2847 | H/AC | 1,800 | 12/15/1988 |

## SALES DATA

| OFF RECORD Number | DATE | TYPE INST | Q / U | V / I | RSN CD | SALE PRICE |
|---|---|---|---|---|---|---|
| 2525/1200 | 12/29/2021 | WD | Q | I | 01 | 2,250,000 |
| GRANTOR: PALMETTO WALK 1 INC | | | | | | |
| GRANTEE: PALMETTO WALK AMELI | | | | | | |
| 2346/1688 | 3/13/2020 | WD | U | I | 11 | 100 |
| GRANTOR: TENNILLE WILSON R | | | | | | |
| GRANTEE: PALMETTO WALK 1 INC | | | | | | |

## BUILDING NOTES

## BUILDING DIMENSIONS

SFB=[YR=1993] W40 S22 SFB=[YR=1993] S8 BAS=[YR=1993] W3 S2 UOP=[YR=1993] W4 S6 E4 N6$ S19 UOP=[YR=1993] W5 S9 E8 FOP=[YR=1993] E6 STR=[YR=1993] S4 E12 N4 W12$ E26 STR=[YR=1993] E4 N8 W4 S8$ N8 W32 S8$ N8 W3 N1$ S1 E39 N22 W36$ E33 N8 W33$ E6 N6 E34 N16$ PTR= E25 FUS=[YR=1993] E39 S22 W39 STR=[YR=1993] W4 N16 UOP=[YR=1993] N6 E4 S6 W4$ E4 S16$ N22$ W25$ .

## EXTRA FEATURES

| LN | OB/XF CODE | DESCRIPTION | BLD | CAP | L | W | UNITS | UT | Adj R | ADJ UNIT PRICE | ORIG COND | YEAR ON | YEAR ACTUAL | Q | % COND | OB/XF MKT VALUE | NOTES |
|---|---|---|---|---|---|---|---|---|---|---|---|---|---|---|---|---|---|
| 21 | 0855 | CONC PAVER | 0 | 0 | 0 | 0 | 168.00 | SF | 10.00 | 10.00 | 100 | 1987 | 1987 | 3 | 52 | 874 | |
| 22 | 0971 | ST LGHT OV | 0 | 0 | 0 | 0 | 2.00 | UT | 1,555.00 | 1,555.00 | 100 | 2005 | 2005 | 3 | 66 | 2,053 | |
| 23 | 0810 | CONCRETE A | 0 | 0 | 26 | 3 | 78.00 | SF | 6.50 | 6.50 | 100 | 2011 | 2011 | 3 | 92 | 466 | |
| 24 | 0810 | CONCRETE A | 0 | 0 | 10 | 10 | 100.00 | SF | 6.50 | 6.50 | 100 | 2011 | 2011 | 3 | 92 | 598 | |
| 25 | 0418 | EXHST FAN | 0 | 0 | 0 | 0 | 1.00 | UT | 400.00 | 400.00 | 100 | 2011 | 2011 | 3 | 50 | 200 | |
| 26 | 0446 | BOX FNC 6' | 0 | 0 | 0 | 0 | 8.00 | LF | 20.00 | 20.00 | 100 | 2011 | 2011 | 3 | 50 | 80 | |
| 27 | 0855 | CONC PAVER | 0 | 0 | 26 | 6 | 156.00 | SF | 10.00 | 10.00 | 100 | 1987 | 1987 | 3 | 52 | 811 | |
| 28 | 0479 | VF PICKET | 0 | 0 | 0 | 0 | 68.00 | LF | 7.50 | 7.50 | 100 | 2000 | 2000 | 3 | 52 | 265 | |
| 29 | 0350 | CARPORT WD | 0 | 0 | 13 | 8 | 104.00 | SF | 13.00 | 13.00 | 100 | 2000 | 2000 | 3 | 20 | 270 | |
| 30 | 0971 | ST LGHT OV | 0 | 0 | 0 | 0 | 1.00 | UT | 1,555.00 | 1,555.00 | 100 | 2000 | 2000 | 3 | 52 | 809 | |

TOTAL OB/XF 6,426

## LAND DESCRIPTION

| LN | USE CODE | CLS | LAND USE DESCRIPTION | CAP | RD | LOC ZONE | FRONT | DEPTH | TOT LND UTS | UNIT TYPE | DT | DPTH FACT | % COND | TOT ADJ | UNIT PRICE | ADJ UNIT PRICE | LAND VALUE | OTHER ADJUSTMENTS AND NOTES | YEAR | DENSITY | DECL | FRZ | YR | CONSRV |
|---|---|---|---|---|---|---|---|---|---|---|---|---|---|---|---|---|---|---|---|---|---|---|---|---|

REVIEW DATE 07/12/2024 BY KBA Total Acres: 0.00 Total Land Value: 1,842,580 Market: 0 Agricultural: 0 Common: 1,842,580 PRINTED 08/06/2024 BY SYS

PT LOTS 3,6 & CLOSED RD LYING
BETWEEN LOTS 3 & 6
IN OR 2525/1200 BEING

PALMETTO WALK AMELIA LLC
960185 GATEWAY BLVD STE 203
FERNANDINA BEACH, FL 32034

**2024**

**00-00-30-0760-0003-0030**

## BUILDING CHARACTERISTICS

| ELEMENT | CD | CONSTRUCTION |
|---|---|---|
| Exterior Wall | 06 | BD/BATTEN 60 |
| Exterior Wall | 10 | ABOVE AVG 40 |
| Roof Structur | 04 | WOOD TRUSS 100 |
| Roof Cover | 12 | MODULAR MT 100 |
| Interior Wall | 05 | DRYWALL 100 |
| Interior Floo | 14 | CARPET 100 |
| Ceiling | 01 | FIN.SUSPD 100 |
| Air Condition | 03 | CENTRAL 100 |
| Heating Type | 04 | AIR DUCTED 100 |
| Fixtures | | 4 100 |
| Frame | 02 | WOOD FRAME 100 |
| Story Height | | 8 100 |
| RMS | | 4 100 |
| Stories | 2. | 2. 100 |
| Units | | 0 100 |
| Occupancy | 00 | NONE 100 |
| Quality | 03 | Quality Level 03 |
| DOR CODE | 1600 | COMMUNITY SHOPPING |
| MAP NUM | | MKT AREA 03 |
| NEIGHBORHOOD/LOC | 3016.00 | |

| AREA TYPE | TOTAL GROSS AREA | PCT OF BASE | TOT ADJ AREA | SUBAREA MARKET VALUE |
|---|---|---|---|---|
| BAS | 924 | 100 | 924 | 35,125 |
| DCK | 172 | 10 | 17 | 646 |
| FUS | 924 | 100 | 924 | 35,125 |
| STR | 12 | 10 | 1 | 38 |
| STR | 32 | 10 | 3 | 114 |
| STR | 48 | 10 | 5 | 190 |
| UOP | 132 | 20 | 26 | 988 |
| UOP | 216 | 20 | 43 | 1,635 |
| TOTALS | 2,460 | | 1,943 | 73,861 |

## MARKET ADJUSTMENTS

| TYPE | MDL | EFF. AREA | TOT ADJ PTS | EFF. BASE RATE | REPL. COST NEW | AYB | EYB | ECON | FNCT | AP | NORM | % COND |
|---|---|---|---|---|---|---|---|---|---|---|---|---|
| 1701 | 04 | 1,943 | 90.9090 | 128.86 | 250,375 | 1986 | 1986 | 0 | 0 | 20 | 50.50 | 29.50 |

7 OFFICE 1&2 – 0% - 0 Heated Area: 1848 HX Base Yr

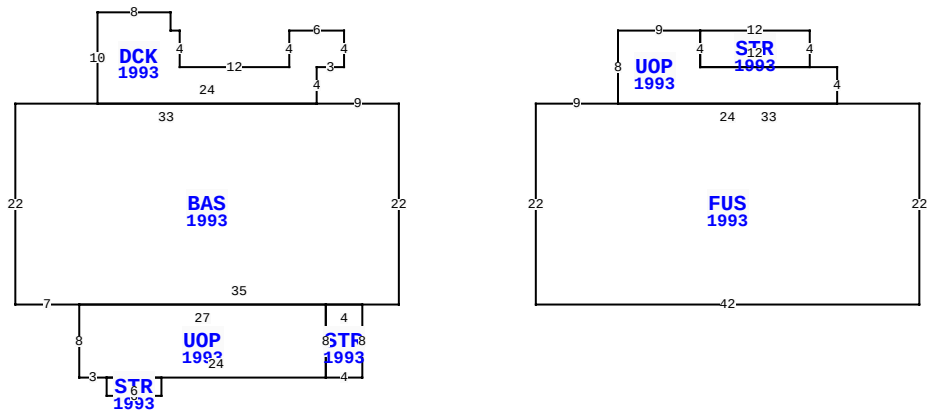


4828 FIRST COAST HWY, FERNANDINA BEACH

| | | |
|---|---|---|
| BLD DATE | 06/11/2018 | KK |
| XF DATE | | |
| INC DATE | | |
| LGL DATE | | |
| LAND DATE | | |
| AG DATE | | |

## NASSAU COUNTY PROPERTY

PAGE 4 of 5 8

### VALUATION SUMMARY

| | |
|---|---|
| VALUATION BY | STANDARD |
| Tax Group: 8 | Tax Dist: |
| BUILDING MARKET VALUE | 516,565 |
| TOTAL MARKET OB/XF VALUE | 59,444 |
| TOTAL LAND VALUE - MARKET | 1,842,580 |
| TOTAL MARKET VALUE | 2,418,589 |
| SOH/AGL Deduction | 0 |
| ASSESSED VALUE | 2,418,589 |
| TOTAL EXEMPTION VALUE | 0 |
| BASE TAXABLE VALUE | 2,418,589 |
| TOTAL JUST VALUE | 2,418,589 |
| NCON VALUE | 0 |
| INCOME VALUE | 21,233,736 |
| PREVIOUS YEAR MKT VALUE | 2,470,031 |

| PERMIT NUM | DESCRIPTION | AMT | ISSUED |
|---|---|---|---|
| 5583 | REMODEL | 1,000 | 12/15/1988 |
| 5301 | ADDITION | 15,120 | 11/16/1988 |
| BP 4278 | N/A | 139,304 | 07/31/1987 |
| 4278 | NEW CONSTR | 139,304 | 07/31/1987 |
| 3559 | NEW CONSTR | 4,000 | 08/14/1986 |
| 3040 | NEW CONSTR | 45,906 | 04/02/1986 |

## SALES DATA

| OFF RECORD Number | DATE | TYPE INST | Q / U | V / I | RSN CD | SALE PRICE |
|---|---|---|---|---|---|---|
| 2525/1200 | 12/29/2021 | WD | Q | I | 01 | 2,250,000 |
| GRANTOR: PALMETTO WALK 1 INC | | | | | | |
| GRANTEE: PALMETTO WALK AMELI | | | | | | |
| 2346/1688 | 3/13/2020 | WD | U | I | 11 | 100 |
| GRANTOR: TENNILLE WILSON R | | | | | | |
| GRANTEE: PALMETTO WALK 1 INC | | | | | | |

## BUILDING NOTES

## BUILDING DIMENSIONS

BAS=[YR=1993] W9 DCK=[YR=1993] N4 E3 N4 W6 S4 W12 N4 W1 N2 W8 S10 E24$ W33 S22 E7 UOP=[YR=1993] S8 E3 STR=[YR=1993] S2 E6 N2 W6$ E24 STR=[YR=1993] E4 N8 W4 S8$ N8 W27$ E35 N22$ PTR= E15 FUS=[YR=1993] E9 UOP=[YR=1993] N8 E9 STR=[YR=1993] E12 S4 W12 N4$ S4 E15 S4 W24$ E33 S22 W42 N22$ W15$.

## EXTRA FEATURES

| LN | OB/XF CODE | DESCRIPTION | BLD | CAP | L | W | UNITS | UT | Adj R | ADJ UNIT PRICE | ORIG COND | YEAR ON | YEAR ACTUAL | Q | % COND | OB/XF MKT VALUE | NOTES |
|---|---|---|---|---|---|---|---|---|---|---|---|---|---|---|---|---|---|
| 31 | 1242 | WD DECK A | 0 | 0 | 16 | 5 | 80.00 | SF | 10.00 | 10.00 | 100 | 2000 | 2000 | 3 | 20 | 160 | |
| 32 | 0810 | CONCRETE A | 0 | 0 | 0 | 0 | 472.00 | SF | 6.50 | 6.50 | 100 | 2010 | 2010 | 3 | 91 | 2,792 | |
| 33 | 6001 | ROLLUP DR | 0 | 0 | 0 | 0 | 4.00 | UT | 400.00 | 400.00 | 100 | 1990 | 1990 | 3 | 20 | 320 | |
| 34 | 0446 | BOX FNC 6' | 0 | 0 | 0 | 0 | 8.00 | LF | 20.00 | 20.00 | 100 | 2000 | 2000 | 3 | 20 | 32 | |
| 35 | 0978 | SECURTY LT | 0 | 0 | 0 | 0 | 1.00 | UT | 450.00 | 450.00 | 100 | 2000 | 2000 | 3 | 52 | 234 | |
| 36 | 0855 | CONC PAVER | 0 | 0 | 0 | 0 | 763.00 | SF | 10.00 | 10.00 | 100 | 2014 | 2014 | 3 | 95 | 7,249 | |
| 37 | 0381 | COOLER | 0 | 0 | 12 | 8 | 96.00 | SF | 82.50 | 82.50 | 100 | 2014 | 2014 | 3 | 75 | 5,940 | |

## LAND DESCRIPTION

TOTAL OB/XF 16,727

| LN | USE CODE | CLS | LAND USE DESCRIPTION | CAP | RD | LOC ZONE | FRONT | DEPTH | TOT LND UTS | UNIT TYPE | DT | DPTH FACT | % COND | TOT ADJ | UNIT PRICE | ADJ UNIT PRICE | LAND VALUE | OTHER ADJUSTMENTS AND NOTES | YEAR | DENSITY | DECL | FRZ | YR | CONSRV |
|---|---|---|---|---|---|---|---|---|---|---|---|---|---|---|---|---|---|---|---|---|---|---|---|---|

REVIEW DATE 07/12/2024 BY KBA Total Acres: 0.00 Total Land Value: 1,842,580 Market: 0 Agricultural: 0 Common: 1,842,580 PRINTED 08/06/2024 BY SYS

PT LOTS 3,6 & CLOSED RD LYING
BETWEEN LOTS 3 & 6
IN OR 2525/1200 BEING

PALMETTO WALK AMELIA LLC
960185 GATEWAY BLVD STE 203
FERNANDINA BEACH, FL 32034

**2024**

**00-00-30-0760-0003-0030**

## NASSAU COUNTY PROPERTY



## BUILDING CHARACTERISTICS

| ELEMENT | CD | CONSTRUCTION |
|---|---|---|
| Exterior Wall | 15 | CONC BLOCK 70 |
| Exterior Wall | 06 | BD/BATTEN 30 |
| Roof Structur | 04 | WOOD TRUSS 100 |
| Roof Cover | 12 | MODULAR MT 100 |
| Interior Wall | 01 | MINIMUM 100 |
| Interior Floo | 03 | CONC FINSH 100 |
| Ceiling | 02 | F.NOT SUS 100 |
| Air Condition | 01 | NONE 100 |
| Heating Type | 01 | NONE 100 |
| Plumbing | | 2 100 |
| Frame | 03 | MASONRY 100 |
| Story Height | | 9 100 |
| RMS | | 4 100 |
| Stories | 2. | 2. 100 |
| Class | 00 | . 100 |
| Units | | 0 100 |
| Occupancy | 00 | NONE 100 |
| Quality | 03 | Quality Level 03 |
| DOR CODE | 1600 | COMMUNITY SHOPPING |
| MAP NUM | | MKT AREA 03 |
| NEIGHBORHOOD/LOC | 3016.00 | |

| AREA TYPE | TOTAL GROSS AREA | PCT OF BASE | TOT ADJ AREA | SUBAREA MARKET VALUE |
|---|---|---|---|---|
| BAS | 3,452 | 100 | 3,452 | 21,962 |
| CAN | 1,120 | 30 | 336 | 2,138 |
| SFB | 1,376 | 80 | 1,101 | 7,005 |
| TOTALS | 5,948 | | 4,889 | 31,104 |

## MARKET ADJUSTMENTS

| TYPE | MDL | EFF. AREA | TOT ADJ PTS | EFF. BASE RATE | REPL. COST NEW | AYB | EYB | ECON | FNCT | | NORM | % COND |
|---|---|---|---|---|---|---|---|---|---|---|---|---|
| 4803 | 06 | 4,889 | 69.5250 | 31.81 | 155,519 | 1980 | 1980 | 0 | 0 | 0 | 80.00 | 20.00 |

8 STOR WAREH – 0% - 0 Heated Area: 4553 HX Base Yr

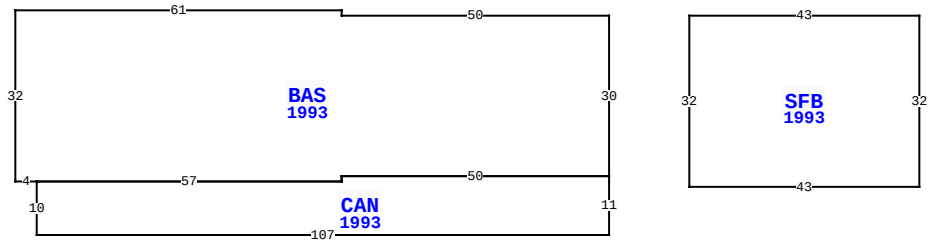


4828 FIRST COAST HWY, FERNANDINA BEACH

| | | | |
|---|---|---|---|
| BLD DATE | 06/11/2018 KK | LGL DATE | |
| XF DATE | | LAND DATE | |
| INC DATE | | AG DATE | |

## VALUATION SUMMARY

| | |
|---|---|
| VALUATION BY | STANDARD |
| Tax Group: 8 | Tax Dist: |
| BUILDING MARKET VALUE | 516,565 |
| TOTAL MARKET OB/XF VALUE | 59,444 |
| TOTAL LAND VALUE - MARKET | 1,842,580 |
| TOTAL MARKET VALUE | 2,418,589 |
| SOH/AGL Deduction | 0 |
| ASSESSED VALUE | 2,418,589 |
| TOTAL EXEMPTION VALUE | 0 |
| BASE TAXABLE VALUE | 2,418,589 |
| TOTAL JUST VALUE | 2,418,589 |
| NCON VALUE | 0 |
| INCOME VALUE | 21,233,736 |
| PREVIOUS YEAR MKT VALUE | 2,470,031 |

| PERMIT NUM | DESCRIPTION | AMT | ISSUED |
|---|---|---|---|
| 3169 | NEW CONSTR | 45,470 | 02/04/1986 |
| 3041 | NEW CONSTR | 36,200 | 08/18/1985 |

## SALES DATA

| OFF RECORD Number | DATE | TYPE INST | Q U | V I | RSN CD | SALE PRICE |
|---|---|---|---|---|---|---|
| 2525/1200 | 12/29/2021 | WD | Q | I | 01 | 2,250,000 |
| GRANTOR: PALMETTO WALK 1 INC | | | | | | |
| GRANTEE: PALMETTO WALK AMELI | | | | | | |
| 2346/1688 | 3/13/2020 | WD | U | I | 11 | 100 |
| GRANTOR: TENNILLE WILSON R | | | | | | |
| GRANTEE: PALMETTO WALK 1 INC | | | | | | |

## BUILDING NOTES

## BUILDING DIMENSIONS

BAS=[YR=1993] W50 N1 W61 S32 E4 CAN=[YR=1993] S10 E107 N11 W50 S1 W57$ E57 N1 E50 N30$ PTR= E15 SFB=[YR=1993] E43 S32 W43 N32$ W15$ .

## EXTRA FEATURES

| LN | OB/XF CODE | DESCRIPTION | BLD | CAP | L | W | UNITS | UT | Adj R | ADJ UNIT PRICE | ORIG COND | YEAR ON | YEAR ACTUAL | Q | % COND | OB/XF MKT VALUE | NOTES |
|---|---|---|---|---|---|---|---|---|---|---|---|---|---|---|---|---|---|

## LAND DESCRIPTION

TOTAL OB/XF 0

| LN | USE CODE | CLS | LAND USE DESCRIPTION | CAP | RD | LOC ZONE | FRONT | DEPTH | TOT LND UTS | UNIT TYPE | DT | DPTH FACT | % COND | TOT ADJ | UNIT PRICE | ADJ UNIT PRICE | LAND VALUE | OTHER ADJUSTMENTS AND NOTES | YEAR | DENSITY | DECL | FRZ | YR | CONSRV |
|---|---|---|---|---|---|---|---|---|---|---|---|---|---|---|---|---|---|---|---|---|---|---|---|---|

REVIEW DATE 07/12/2024 BY KBA Total Acres: 0.00 Total Land Value: 1,842,580 Market: 0 Agricultural: 0 Common: 1,842,580 PRINTED 08/06/2024 BY SYS