PT OF LOT 1 IN OR 2101/151
(EX OR 2356/683 &
EX R/W IN OR 1577/484)

INFANTINI ANTHONY & TRUDIE
1283 QUATTLEFIELD LN
FERNANDINA BEACH, FL 32034

2024

00-00-30-0760-0001-0050

NASSAU COUNTY PROPERTY

BUILDING CHARACTERISTICS

ELEMENT	CD	CONSTRUCTION
Exterior Wall	16	WD FR STUC 100
Roof Structur	04	WOOD TRUSS 100
Roof Cover	03	COMP SHNGL 100
Interior Wall	05	DRYWALL 100
Interior Floo	13	LVT/LAMNT 90
Interior Floo	14	CARPET 10
Air Condition	03	CENTRAL 100
Heating Type	04	AIR DUCTED 100
Bedrooms		4 100
Bathrooms		3 100
Frame	02	WOOD FRAME 100
Stories	1.	1. 100
Units		0 100
Quality	06	Quality Level 06
DOR CODE	0100	SINGLE FAMILY
MAP NUM		MKT AREA 03
NEIGHBORHOOD/LOC	3027.00	

AREA TYPE	TOTAL GROSS AREA	PCT OF BASE	TOT ADJ AREA	SUBAREA MARKET VALUE
BAS	3,167	100	3,167	927,734
FGR	736	55	405	118,640
FOP	28	30	8	2,343
FOP	1,061	30	318	93,154
SFB	300	80	240	70,305
TOTALS	5,292		4,138	1,212,178

MARKET ADJUSTMENTS

TYPE	MDL	EFF. AREA	TOT ADJ PTS	EFF. BASE RATE	REPL. COST NEW	AYB	EYB	ECON	FNCT		NORM	% COND
0500	12	4,138	196.2752	294.41	1,218,269	2022	2022	0	0	0	0.50	99.50

1 SFR CUST – 100% - 2023 Heated Area: 3407 HX Base Yr 2023

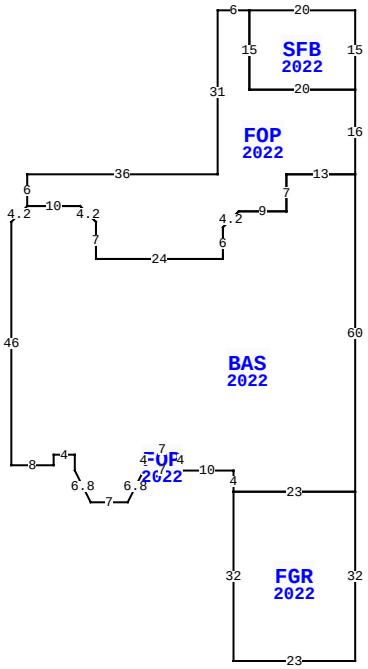

1283 QUATTLEFIELD LN, FERNANDINA BEACH

BLD DATE		LGL DATE	
XF DATE		LAND DATE	
INC DATE		AG DATE	

VALUATION SUMMARY

VALUATION BY		STANDARD
Tax Group: 8	Tax Dist:	
BUILDING MARKET VALUE		1,229,620
TOTAL MARKET OB/XF VALUE		93,598
TOTAL LAND VALUE - MARKET		450,000
TOTAL MARKET VALUE		1,773,218
SOH/AGL Deduction		721,772
ASSESSED VALUE		1,051,446
TOTAL EXEMPTION VALUE	HX HB	50,000
BASE TAXABLE VALUE		1,001,446
TOTAL JUST VALUE		1,773,218
NCON VALUE		18,872
INCOME VALUE		
PREVIOUS YEAR MKT VALUE		1,043,009

PERMIT NUM	DESCRIPTION	AMT	ISSUED
22016016	GARAGE	17,376	10/25/2022
22005476	CO ISSUED	0	04/07/2022
21014703	SWIM POOL	73,000	10/26/2021
20214208	NEW CONSTR	0	05/01/2021

SALES DATA

OFF RECORD Number	DATE	TYPE INST	Q U	V I	RSN CD	SALE PRICE
2101/0151	2/10/2017	WD	Q	V	01	242,500
GRANTOR: DYER MARILYN H						
GRANTEE: INFANTINI ANTHONY &						
1189/0238	11/17/2003	WD	Q	V		132,000
GRANTOR: POWELL WILLIAM W & BA						
GRANTEE: DYER MARILYN H						

BUILDING NOTES

BUILDING DIMENSIONS

SFB=[YR=2022] W20 FOP=[YR=2022] W6 S31 W36 S6 BAS=[YR=2022] D3 L3 S46 E8 N2 E4 S3 D6 R3 E7 U6 R3 FOP=[YR=2022] E7 N4 W7 S4$ N4 E7 S4 E10 S4 FGR=[YR=2022] S32 E23 N32 W23$ E23 N60 W13 S7 W9 D3 L3 S6 W24 N7 U3 L3 W10$ E10 D3 R3 S7 E24 N6 U3 R3 E9 N7 E13 N16 W20 N15$ S15 E20 N15$.

EXTRA FEATURES

LN	OB/XF CODE	DESCRIPTION	BLD	CAP	L	W	UNITS	UT	Adj R	ADJ UNIT PRICE	ORIG COND	YEAR ON	YEAR ACTUAL	Q	% COND	OB/XF MKT VALUE	NOTES
1	0911	SCRN RM A	0	100	0	0	1,280.00	SF	17.50	17.50	100	2022	2022	3	97	21,728	
2	0861	POOL GUNIT	0	100	0	0	485.00	SF	85.00	85.00	100	2022	2022	3	98	40,401	
3	0855	CONC PAVER	0	100	0	0	793.00	SF	10.00	10.00	100	2022	2022	3	100	7,930	
4	0871	POOL HTR R	0	100	0	0	1.00	UT	2,000.00	2,000.00	100	2022	2022	3	97	1,940	
5	0855	CONC PAVER	0	100	0	0	1,489.00	SF	10.00	10.00	100	2022	2022	3	100	14,890	
6	0504	FP-ELECTRI	0	100	0	0	1.00	UT	2,000.00	2,000.00	100	2022	2022	3	100	2,000	
7	0476	VF 6 SBPL	1	100	0	0	66.00	LF	32.00	32.00	100	2023	2022		99	2,091	
8	0470	VNYL GATE	1	100	0	0	4.00	UT	300.00	300.00	100	2023	2022		99	1,188	
9	0810	CONCRETE A	1	100	0	0	220.00	SF	6.50	6.50	100	2023	2023		100	1,430	

LAND DESCRIPTION

TOTAL OB/XF 93,598

LN	USE CODE	CLS	LAND USE DESCRIPTION	CAP	RD	LOC ZONE	FRONT	DEPTH	TOT LND UTS	UNIT TYPE	DT	DPTH FACT	% COND	TOT ADJ	UNIT PRICE	ADJ UNIT PRICE	LAND VALUE	OTHER ADJUSTMENTS AND NOTES	YEAR	DENSITY	DECL	FRZ	YR	CONSRV
1	000100	C	SFR	100		RSF-1	0.00	0.00	1.00	UT		1.00	1.00	1.00	450,000.00	450,000.00	450,000							

REVIEW DATE 01/31/2024 BY KBA Total Acres: 0.00 Total Land Value: 450,000 Market: 0 Agricultural: 0 Common: 450,000 PRINTED 08/06/2024 BY SYS

PT OF LOT 1 IN OR 2101/151
(EX OR 2356/683 &
EX R/W IN OR 1577/484)

INFANTINI ANTHONY & TRUDIE
1283 QUATTLEFIELD LN
FERNANDINA BEACH, FL 32034

2024

00-00-30-0760-0001-0050

NASSAU COUNTY PROPERTY

BUILDING CHARACTERISTICS

ELEMENT	CD	CONSTRUCTION
Exterior Wall	31	HARDIE BRD 100
Roof Structur	03	GABLE/HIP 100
Roof Cover	03	COMP SHNGL 100
Interior Wall	04	PLYWOOD 100
Interior Floo	03	CONC FINSH 100
Frame	02	WOOD FRAME 100
Stories	1.	1. 100
Units		0 100
Quality	03	Quality Level 03

DOR CODE	0100 SINGLE FAMILY
MAP NUM	
MKT AREA	03
NEIGHBORHOOD/LOC	3027.00

AREA TYPE	TOTAL GROSS AREA	PCT OF BASE	TOT ADJ AREA	SUBAREA MARKET VALUE
BAS	572	100	572	17,442
TOTALS	572		572	17,442

MARKET ADJUSTMENTS

TYPE	MDL	EFF. AREA	TOT ADJ PTS	EFF. BASE RATE	REPL. COST NEW	AYB	EYB	ECON	FNCT		NORM	% COND
6500	01	572	88.0000	30.80	17,618	2023	2023	0	0	0	1.00	99.00

2 GARAGE RES – 100% - 2024 Heated Area: 572 HX Base Yr 2023

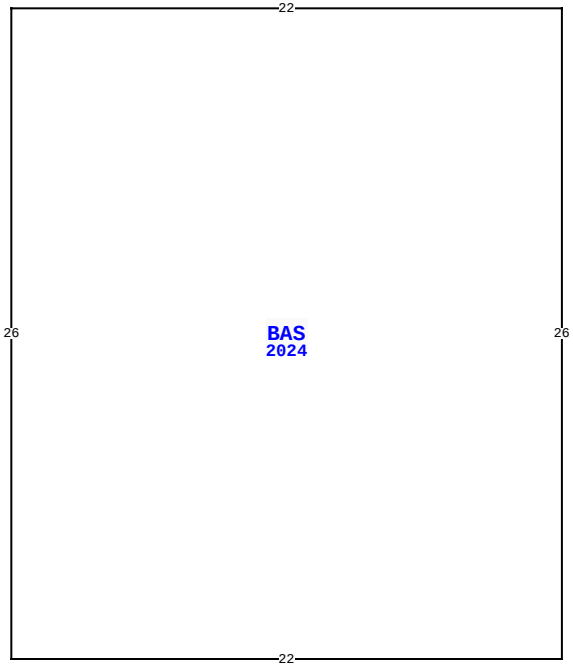

1283 QUATTLEFIELD LN, FERNANDINA BEACH

BLD DATE		LGL DATE	
XF DATE		LAND DATE	
INC DATE		AG DATE	

VALUATION SUMMARY

VALUATION BY		STANDARD
Tax Group: 8	Tax Dist:	
BUILDING MARKET VALUE		1,229,620
TOTAL MARKET OB/XF VALUE		93,598
TOTAL LAND VALUE - MARKET		450,000
TOTAL MARKET VALUE		1,773,218
SOH/AGL Deduction		721,772
ASSESSED VALUE		1,051,446
TOTAL EXEMPTION VALUE	HX HB	50,000
BASE TAXABLE VALUE		1,001,446
TOTAL JUST VALUE		1,773,218
NCON VALUE		18,872
INCOME VALUE		
PREVIOUS YEAR MKT VALUE		1,043,009

PERMIT NUM	DESCRIPTION	AMT	ISSUED

SALES DATA

OFF RECORD Number	DATE	TYPE INST	Q / U	V / I	RSN CD	SALE PRICE
2101/0151	2/10/2017	WD	Q	V	01	242,500
GRANTOR: DYER MARILYN H						
GRANTEE: INFANTINI ANTHONY &						
1189/0238	11/17/2003	WD	Q	V		132,000
GRANTOR: POWELL WILLIAM W & BA						
GRANTEE: DYER MARILYN H						

BUILDING NOTES

BUILDING DIMENSIONS

BAS=[YR=2024;ORIG=40,10] E22 S26 W22 N26 $
.

EXTRA FEATURES

L N	OB/XF CODE	DESCRIPTION	BLD	CAP	L	W	UNITS	UT	Adj R	ADJ UNIT PRICE	ORIG COND	YEAR ON	YEAR ACTUAL	Q	% COND	OB/XF MKT VALUE	NOTES

LAND DESCRIPTION

TOTAL OB/XF 0

L N	USE CODE	CLS	LAND USE DESCRIPTION	CAP	R D	LOC ZONE	FRONT	DEPTH	TOT LND UTS	UNIT TYPE	D T	DPTH FACT	% COND	TOT ADJ	UNIT PRICE	ADJ UNIT PRICE	LAND VALUE	OTHER ADJUSTMENTS AND NOTES	YEAR	DENSITY	DECL	FRZ	YR	CONSRV

REVIEW DATE 01/31/2024 BY KBA Total Acres: 0.00 Total Land Value: 450,000 Market: 0 Agricultural: 0 Common: 450,000 PRINTED 08/06/2024 BY SYS