LOT 93
OCEAN BREEZE AT AMELIA PB 8/91

ABRASSART DEAN & NANCY LIVING TRUST/ABRASSART DEAN
96171 OCEAN BREEZE DR
FERNANDINA BEACH, FL 32034

2024

00-00-30-0741-0093-0000

NASSAU COUNTY PROPERTY

BUILDING CHARACTERISTICS

ELEMENT	CD	CONSTRUCTION
Exterior Wall	10	ABOVE AVG 100
Roof Structur	03	GABLE/HIP 100
Roof Cover	03	COMP SHNGL 100
Interior Wall	05	DRYWALL 100
Interior Floo	11	CLAY TILE 60
Interior Floo	08	SHT VINYL 40
Air Condition	03	CENTRAL 100
Heating Type	04	AIR DUCTED 100
Bedrooms		4 100
Bathrooms		3 100
Frame	03	MASONRY 100
Stories	1.	1. 100
Units		0 100
Occupancy	00	NONE 100
Quality	04	Quality Level 04
DOR CODE	0100	SINGLE FAMILY
MAP NUM		MKT AREA 02
NEIGHBORHOOD/LOC	2122.00	

AREA TYPE	TOTAL GROSS AREA	PCT OF BASE	TOT ADJ AREA	SUBAREA MARKET VALUE
BAS	2,264	100	2,264	376,078
FGR	658	55	362	60,133
FOP	36	30	11	1,828
FOP	56	30	17	2,823
FSP	252	40	101	16,778
FUS	610	100	610	101,328
STR	88	10	9	1,495
TOTALS	3,964		3,374	560,462

MARKET ADJUSTMENTS

TYPE	MDL	EFF. AREA	TOT ADJ PTS	EFF. BASE RATE	REPL. COST NEW	AYB	EYB	ECON	FNCT		NORM	% COND
0500	01	3,374	111.8628	167.79	566,123	2020	2020	0	0	0	1.00	99.00

1 SFR CUST – 100% - 2021 Heated Area: 2874 HX Base Yr 2021

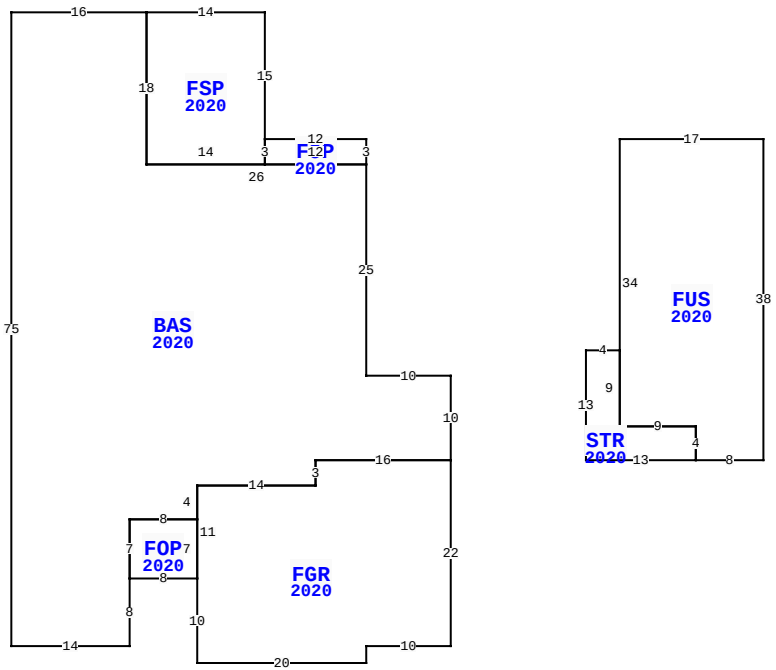

96171 OCEAN BREEZE DR, FERNANDINA BEACH

BLD DATE		LGL DATE	
XF DATE		LAND DATE	
INC DATE		AG DATE	

VALUATION SUMMARY

VALUATION BY		STANDARD
Tax Group: 8	Tax Dist:	
BUILDING MARKET VALUE		560,462
TOTAL MARKET OB/XF VALUE		43,478
TOTAL LAND VALUE - MARKET		300,000
TOTAL MARKET VALUE		903,940
SOH/AGL Deduction		379,815
ASSESSED VALUE		524,125
TOTAL EXEMPTION VALUE	HX HB	50,000
BASE TAXABLE VALUE		474,125
TOTAL JUST VALUE		903,940
NCON VALUE		0
INCOME VALUE		
PREVIOUS YEAR MKT VALUE		879,153

PERMIT NUM	DESCRIPTION	AMT	ISSUED
20000296	SWIM POOL	28,000	01/10/2020
B1808403	NEW CONSTR	380,263	08/16/2018

SALES DATA

OFF RECORD Number	DATE	TYPE INST	Q / U	V / I	RSN CD	SALE PRICE
2428/0146	1/14/2021	QC	U	I	11	100
GRANTOR: ABRASSART DEAN G LIVI						
GRANTEE: ABRASSART DEAN & NA						
2376/1890	6/26/2020	WD	Q	I	02	572,700
GRANTOR: ADVANTAGE HOME BUILDE						
GRANTEE: ABRASSART DEAN G LI						

BUILDING NOTES

BUILDING DIMENSIONS

BAS=[YR=2020;ORIG=-26,-15] W16 S75 E14 N8 N7 E8 N4 E14 N3 E16 N10 W10 N25 W26 N18 $
FGR=[YR=2020;ORIG=-20,52] S10 E20 N2 E10 N22 W16 S3 W14 S11 $
FSP=[YR=2020;ORIG=-12,0] N15 W14 S18 E14 N3 $
FOP=[YR=2020;ORIG=-28,52] E8 N7 W8 S7 $
FOP=[YR=2020;ORIG=0,0] W12 S3 E12 N3 $
FUS=[YR=2020;ORIG=30,0] E17 S38 W8 N4 W9 N34 $
STR=[YR=2020;ORIG=26,25] E4 S9 E9 S4 W13 N13 $
.

EXTRA FEATURES

LN	OB/XF CODE	DESCRIPTION	BLD	CAP	L	W	UNITS	UT	Adj R	ADJ UNIT PRICE	ORIG COND	YEAR ON	YEAR ACTUAL	Q	% COND	OB/XF MKT VALUE	NOTES
1	0855	CONC PAVER	0	100	0	0	1,280.00	SF	10.00	10.00	100	2020	2020	3	99	12,672	
2	0861	POOL GUNIT	0	100	0	0	256.00	SF	85.00	85.00	100	2020	2020	3	93	20,237	
3	0855	CONC PAVER	0	100	0	0	336.00	SF	10.00	10.00	100	2020	2020	3	99	3,326	
4	0462	ST/AL FNC	0	100	0	0	504.00	SF	10.00	10.00	100	2020	2020	3	93	4,687	
5	0463	FENCE GATE	0	100	0	0	2.00	UT	300.00	300.00	100	2020	2020	3	96	576	
6	0504	FP-ELECTRI	0	100	0	0	1.00	UT	2,000.00	2,000.00	100	2020	2020	3	99	1,980	

LAND DESCRIPTION

TOTAL OB/XF 43,478

LN	USE CODE	CLS	LAND USE DESCRIPTION	CAP	RD	LOC ZONE	FRONT	DEPTH	TOT LND UTS	UNIT TYPE	DT	DPTH FACT	% COND	TOT ADJ	UNIT PRICE	ADJ UNIT PRICE	LAND VALUE	OTHER ADJUSTMENTS AND NOTES	YEAR	DENSITY	DECL	FRZ	YR	CONSRV
1	000100	C	SFR	100		PUD	0.00	0.00	1.00	LT		1.00	1.00	1.00	300,000.00	300,000.00	300,000							

REVIEW DATE 11/05/2020 BY RK Total Acres: 0.00 Total Land Value: 300,000 Market: 0 Agricultural: 0 Common: 300,000 PRINTED 08/06/2024 BY SYS